Digital Gyro Repeater

INSTRUCTION MANUAL

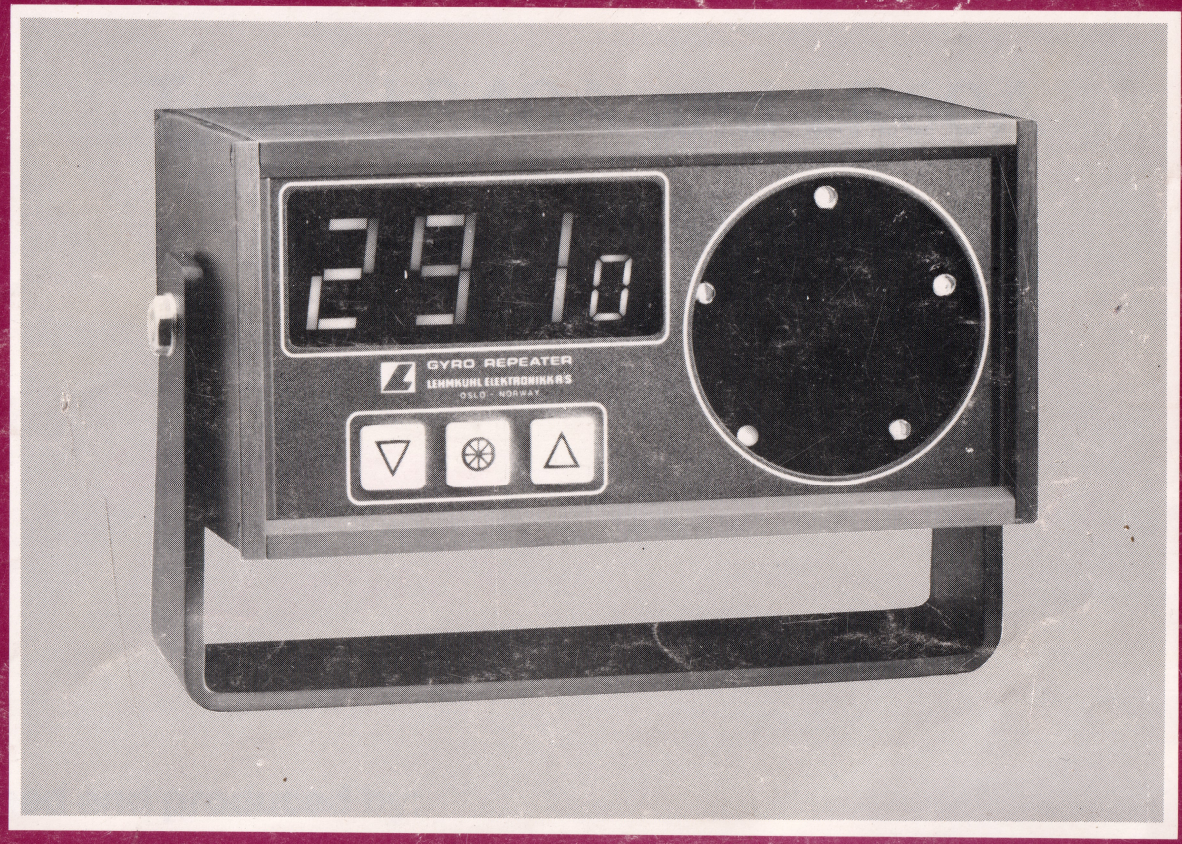

EB LEHMKUHL

LEHMKUHL ELEKTRONIKK a/s

scandinavian micro systems

P.O.Box 155, N - 1411 KOLBOTN, NORWAY
Visiting address: Kongeveien 49, Sofiemyr
Tel.: + 47 2 80 71 07 Fax.: + 47 2 80 80 95
Telex: 72 400 fotex n attn.: scansys

Digital Gyro Repeater

Types LR40A and LR60A
Instruction Manual

Second Edition

Designed and produced by:

scandinavian micro systems

P.O.Box 155, N - 1411 KOLBOTN, NORWAY
Visiting address: Kongeveien 49, Sofiemyr
Tel.: + 47 2 80 71 07 Fax.: + 47 2 80 80 95
Telex: 72 400 fotex n attn.: scansys

HL a/s

BERGERVEIEN 8 - BOX 33
1361 BILLINGSTADSLETTA - NORWAY

TEL. (02) 841000 TELEX - 71583 TELEFAX - (02) 841439

TABLE OF CONTENTS

PAGE

CHAPTER 1 — General Description 4

CHAPTER 2 — Operating Instruction 5

CHAPTER 3 — Technical Specification 6

CHAPTER 4 — Installation 7

CHAPTER 5 — Trouble Shooting 26

CHAPTER 6 — Lay-outs, Diagrams and Components List 27

CHAPTER 7 — Guarantee Certificate 30

CHAPTER ONE

GENERAL DESCRIPTION

1.1.1. The new Lehmkuhl digital gyro repeaters incorporate a micro processor based design allowing greater flexibility and new options.

The ship's heading is displayed by a four digit super bright LED display. The decimal digit is made smaller to avoid misreading of the heading.

1.1.2. The turning indicator which allows the navigator quickly to observe the ship's turning direction and to estimate the turning rate is a ring of thirty solid state lamps. Five of these lamps are lit at the same time. When the ship turns to starboard, all five lights rotate in a clockwise direction and when the ship turns to port, the five lights rotate in an anti-clockwise direction with a resolution of 6 or 3 steps per degree turning of the ship, as programmed at the installation.

1.1.3. The operator keyboard consists of three touch buttons with tactile feed-back to allow for Brilliance Control, Heading Display Adjust, Test Functions, and System Reset.

TYPES AVAILABLE

1.2.1. Type LR40A accepting stepper type transmission or synchro type transmission, ratio 180:1 and 360:1 respectively.

1.2.2. Type LR60A(H) or (L), is programable to accept synchro type transmission, ratio 1:1, 36:1, 90:1 or 180:1.When programmed for ratio 1:1 the repeater is self-aligning. For the remaining transmission ratios the repeater is self-aligning within 10, 4 and 2 degrees respectively (see chapter two). Suffix H stands for high level transmission signals and L stands for low level transmission signals. When ordering this type it should be stated whether H or L versions are required.

1.2.3. Both types can be internally programmed to work as Master Repeater or as Slave Repeater.

1.2.4 Both types are selfpowered and have to be programmed to suit the ship's mains, 115 or 230VAC, or 9VDC. Type LR40A must be programmed to accept the transmission signals of the gyro to which it is connected, whereas type LR60A must be programmed to suit the transmission ratio.

CHAPTER TWO

OPERATING INSTRUCTIONS

HEADING DISPLAY ADJUST

2.1.1. LR40A. When voltage is switched on the Heading Display will flash 000.0. Pressing and holding the Center-Button and one of the Arrow-Buttons simultaneously will stop the flashing,and the reading in the Heading Display will start to change after a short time delay. The Up-Arrow button will cause the reading to increase (Star Board) while the Down-Arrow button will cause the reading to decrease (Port).

When adjusting the Heading Display, the reading will change slowly at first and then increase with time up to a max. counting speed of approx. 10 degrees per second. If both buttons are released briefly, the counting will start off at the slowest speed again.

NOTE! ADJUSTING THE HEADING DISPLAY WILL CANCEL ALL ALARMS.

2.1.2. LR60A. When voltage is switched on the Heading Display will flash 000.0. Pressing and holding the Centre-Button and one of the Arrow-Buttons simultaneously will stop the flashing. If the repeater is programmed for transmission ratio 1:1 it automaticly aligns to the gyro course. If programmed for ratios 36:1, 90:1 or 180:1 the Centre-Button and one of the Aroow-Buttons must be pressed until the reading of the repeater is within 10, 4 or 2 degrees, respectively, of the gyro course.

When adjusting the Heading Display, the reading will change slowly at first and then increase with time up to max. counting speed. If both buttons are released briefly, the counting will start off at the slowest speed again.

BRILLIANCE CONTROL

2.2.1. Pressing the Up-Arrow increases the display brilliance. Pressing the Down-Arrow decreases the display brilliance.

DISPLAY TEST (LAMP TEST)

2.3.1. Pressing and holding BOTH Arrow Buttons simultaneously will alternately test the Heading Display and the Turning Indicator.

STATUS TEST

2.4.1. When pressing and holding the Center-Button alone for at least 5 sec. 000.0 will be displayed when no fault exists. In case of failure various codes are displayed, see Chapter 5. The heading will reappear as soon as the Center-Button is released.

RESET

2.5.1. Pressing all three buttons simultaneously will immediately reset the heading to 000.0 degrees and the display will start flashing.

CHAPTER THREE

TECHNICAL SPECIFICATION

TYPE LR40A MASTER/SLAVE REPEATER

3.1.1. The LR40A can be internally programmed to be a Master Repeater or a Slave Repeater. As a Master Repeater, the LR40A decodes 180:1 or 360:1 transmission signals, displays the ship's heading, and controls the turning indicator and the RS 422 serial output interface.

As a Slave Repeater the LR40A receives RS 422 serial information from a Master Repeater, type LR40A or LR60A, displays the ship's heading, and controls the turning indicator and the RS422 serial output interface.

TYPE LR60A MASTER/SLAVE REPEATER

3.1.2. The LR60A can be internally programmed to be a Master Repeater or a Slave Repeater. As a Master Repeater the LR60A decodes synchro type transmission signals, ratio 1:1, 36:1, 90:1, 180:1, displays the ship's heading, and controls the turning indicator and the RS 422 serial output interface.

As a Slave Repeater the LR60A receives RS 422 serial information from a Master Repeater type LR60A or LR40A, displays the ship's heading, and controls the turning indicator and the RS422 serial output interface.

GYRO TRANSMISSION INTERFACE

3.2.1. The LR40A can be connected to most gyro types by programming some D.I.L. switches and selecting the correct resistor and zener diode values for the given gyro transmission signal level. The standard LR40A interface includes:

3-phase synchro type transmission, ref.voltage 50-150VAC, 50-500 Hz, ratio 360:1.
Microtecnica's Polaris (MB20) with DC "synchro system".

3-phase stepper type transmission 24-70VDC with positive or negative reference, ratio 180:1.
Gyro Star Anschuetz' Gyro Star with 2-phase transmission.

The LR40A loads the gyro transmission signals with approximately 20 mA.RMS.

3.2.2. The LR60A (H) or (L) decodes the synchro type transmission signals with ratio 1:1, 36:1, 90:1and 180:1.
High level, suffix H, accepts ref. voltage 115VAC, 400Hz. Low level, suffix L, accepts ref. voltage 26VAC, 400Hz.

ELECTRICAL SPECIFICATIONS

3.3.1

Mains	110 or 220VAC, +15/-10%, 50 or 60Hz,or 9VDC, +/- 5%.
Power Consumption	Approximately 7 watt.
Accuracy	Within 0.2 degrees of gyro compass reading at or below max. turning rate of 720 degrees per minute.
Serial input/output	Two RS 422 serial output lines running at 9600 bits/sec or at 1200 bits/sec. The serialtransmission is based on a standard Motorola type asynchronous Serial Communication Interface (SCI) with 10 bits per transmitted character (start bit, 8 bit word, no parity and one stop bit).

Data Protocol

Start bit 1		
Bit 1	Digit value	LSB
Bit 2	"	
Bit 3	"	
Bit 4	"	MSB
Bit 5	Digit Address	LSB
Bit 6	"	MSB
Bit 7 (M1)	Mode control	
Bit 8 (M2	"	
Stop bit 1		

Mode Control

M1 and M2 low: Transmits heading data.
M1 and M2 high: Transmits special alarm.

BH 6-5-4-3-2-1
0 0 1 0 1 0 = Alarm state in master
0 0 0 0 0 0 = No alarm state in master

ENVIRONMENTAL SPECIFICATION

3.4.1. Operating: 0 deg. C to + 55 deg. C, max. 95% relative humidity.
Storage: — 25 deg. C to + 70 deg. C.

MECHANICAL SPECIFICATIONS

3.5.1 Material: Box and cradle in extruded and anodized aluminium.

WEIGHT AND DIMENSIONS

3.5.1. Weight 2 kgs, Width 192mm, Height 96mm, Depth 112mm.

CHAPTER FOUR

INSTALLATION

GENERAL

4.1.1. The digital gyro repeater can be cradle mounted or panel mounted. Standard delivery includes both cradle and panel fixing brackets. See fig. 4.1 and 4.2.

4.1.2. The unit contains three printed circuit boards, the display PCB, the computer PCB, and the power and interface PCB. The printed circuit boards are all fixed to the rear cover. The mains transformer and the line filter are also mounted on the rear cover.

4.1.3. The Touch-Buttons of the front panel are provided with a foil cable which is connected to the computer PCB by means of a plug and socket assembly.

4.1.4. In order to do the required Programming the PCB assembly must be removed from the box. This is done by unscrewing the six self-tapping screws securing the rear cover, see fig. 4.3. Be careful not to damage the foil cable. After completing the programming the foil cable must be reconnected before the PCB assembly is refitted.

4.1.5. A terminal assembly is fixed to the rear cover by means of four 3M screws. The terminal assembly is provided with a connector PCB, and with three glands allowing entrance of the signal cables. Connection to the interface PCB is via a ribbon cable which is plugged into the socket of the connector PCB.

The zener diodes required to program a type LR40A repeater for stepper type transmission with negative reference are located on the connector PCB.

INTERCONNECTIONS

4.2.1. Each repeater unit is supplied with a line cord, 1.5M long. A mains socket with earth connection has to be provided as near as possible to the site of the repeater unit. The line cord should be shortened as appropriate and fitted with a plug (with earth).

4.2.2. Remaining cables to be run will depend on the number of slave units to be installed, and whether data transmission to computers is required. Full details are given in interconnecting diagram, Fig. 4.4.

TERMINATING CABLES, See Fig. 4.3.

4.3.1. Unscrew terminal assembly and carefully unplug ribbon cable.

4.3.2. Unscrew connector PCB.

4.3.3. Prepare cable ends as shown.

4.3.4. Enter cable(s) and tighten gland(s).

4.3.5. Braid(s) to be provided with earth lug(s) and fixed to the earthing screw.

4.3.6. Refix the connector PCB.

4.3.7. Connect wires as shown in the appropriate diagram.

4.3.8. Replug ribbon cable and refit terminal assembly.

NOTE! If no mechanical repeaters are connected to gyros having stepper type transmission external load resistors must be provided and wired from S_1, S_2 and S_3 to + or − ref. as appropriate. Suitable resistors are:
Transmission voltage 35V: 270 ohms 10W
Transmission voltage 70V: 1k5 ohms 5W

PROGRAMMING OF REPEATER TYPE LR40A

4.4.1. Before leaving the factory all repeater units are programmed to accept 220VAC and to work as master repeater. The turning indicator is programmed to rotate at a rate of 6 steps per degree turning of the ship. If fitted on a smaller vessel the programming may be changed to 3 steps per degree as this may give a more convenient turning indication.

4.4.2. Fig. 4.5 shows how the mains input should be programmed and how the mains fuse should be selected. The figure also shows the setting of the D.I.L. switches SW200/4-5-6-7-8. This will determine:

1. Whether the repeater should work as master or as slave.
2. Baud rate of the data output/input.
3. Rate of turning indication (6 or 3 steps per degree turning of the ship).

4.4.3. All signal lines on the interface PCB are left open and links have to be made as appropriate.

The tables, figs. 4.6, 4.7, 4.8, 4.9, 4.10, 4.11, 4.12, 413, 4.14, and 4.15 show how D.I.L. switches SW200 and SW300 should be set and which links should be connected depending on the type of signal transmission. One table for each type of gyro or a group of gyros requiring identical programming is shown.

PROGRAMMING OF REPEATER TYPE LR60A

4.5.1. Before leaving the factory all repeater units are programmed to accept 220VAC, transmission ratio 1:1 and to work as master repeater. The turning indicator is programmed to rotate at a rate of 6 steps per degree turning of the ship. If fitted on a smaller vessel the programming may be changed to 3 steps per degree as this may give a more convenient turning indication.

4.5.2. Fig. 4.16 shows how the mains input should be programmed and how the mains fuse should be selected. The figure also shows the setting of the D.I.L. switches SW200/4-5-6-7-8. This will determine:

1. Whether the repeater should work as master or as slave.
2. Baud rate of the data output/input.
3. Rate of turning indication (6 or 3 steps per degree turning of the ship).

Fig 4.17, 4.18, 4.19 and 4.20 show how D.I.L. switches SW200/1-2-3 should be set for various transimission ratios.

Fig. 4.1.

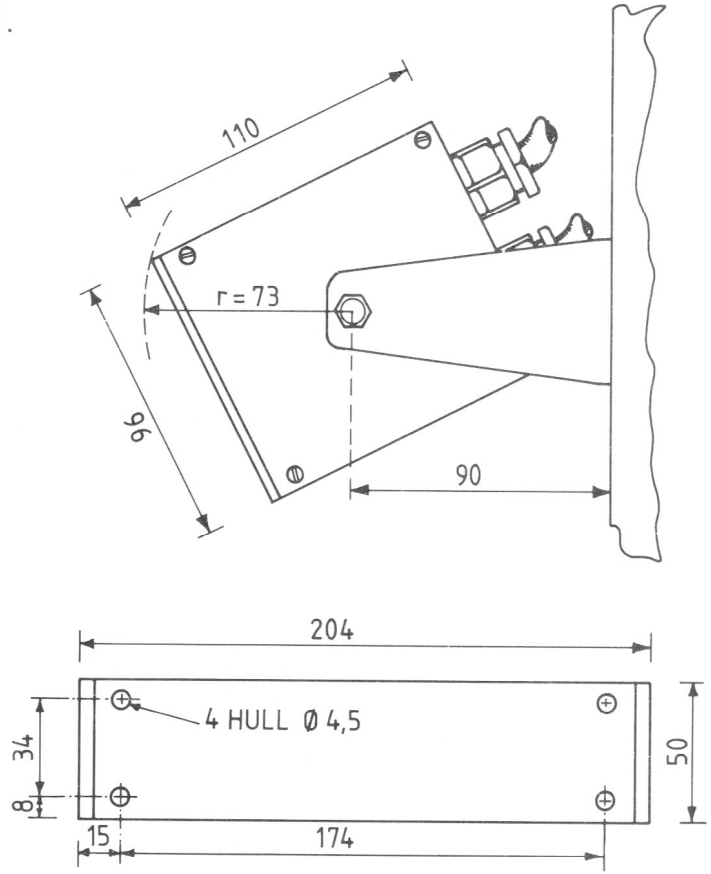

DIMENSIONS IN MILLIMETERS

Fig. 4.2.

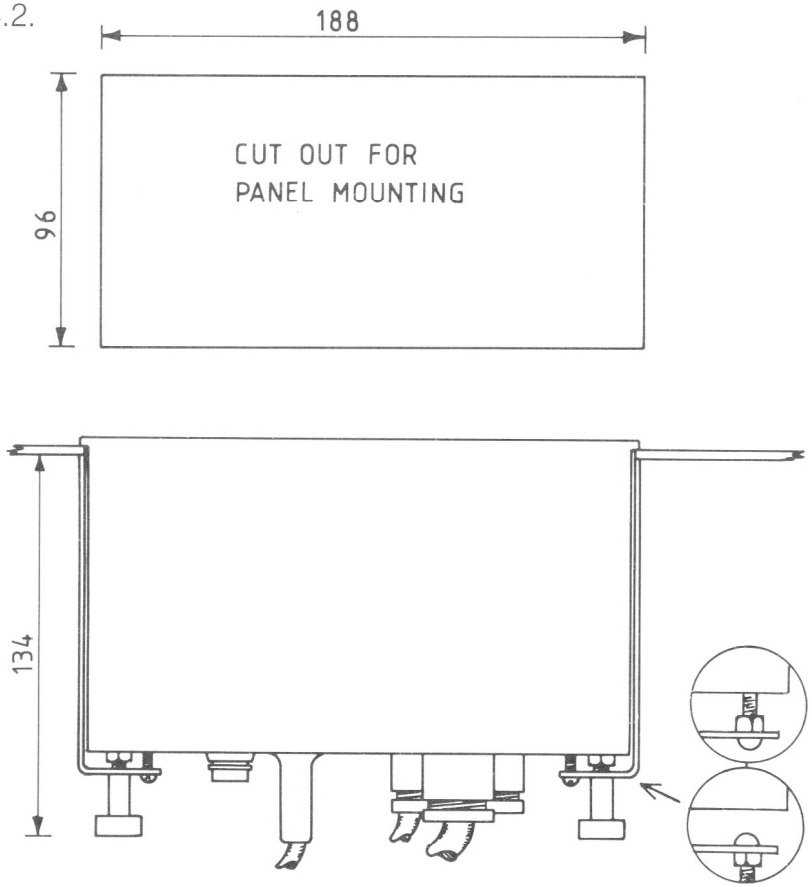

DIMENSIONS IN MILLIMETERS

Fig. 4.3.

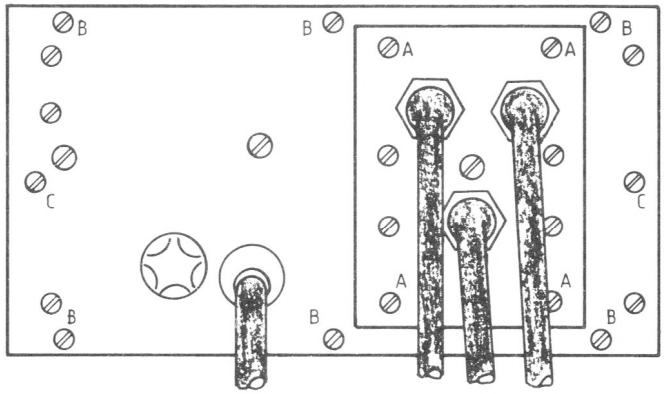

A : FIXING TERMINAL ASSEMBLY
B : FIXING REAR COVER
C : FOR PANEL MOUNTING ONLY

DETAIL OF TERMINAL ASSEMBLY

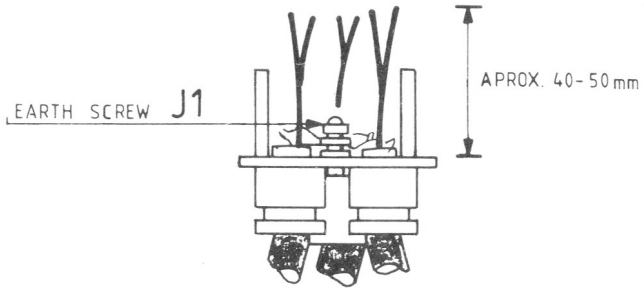

Fig. 4.4.

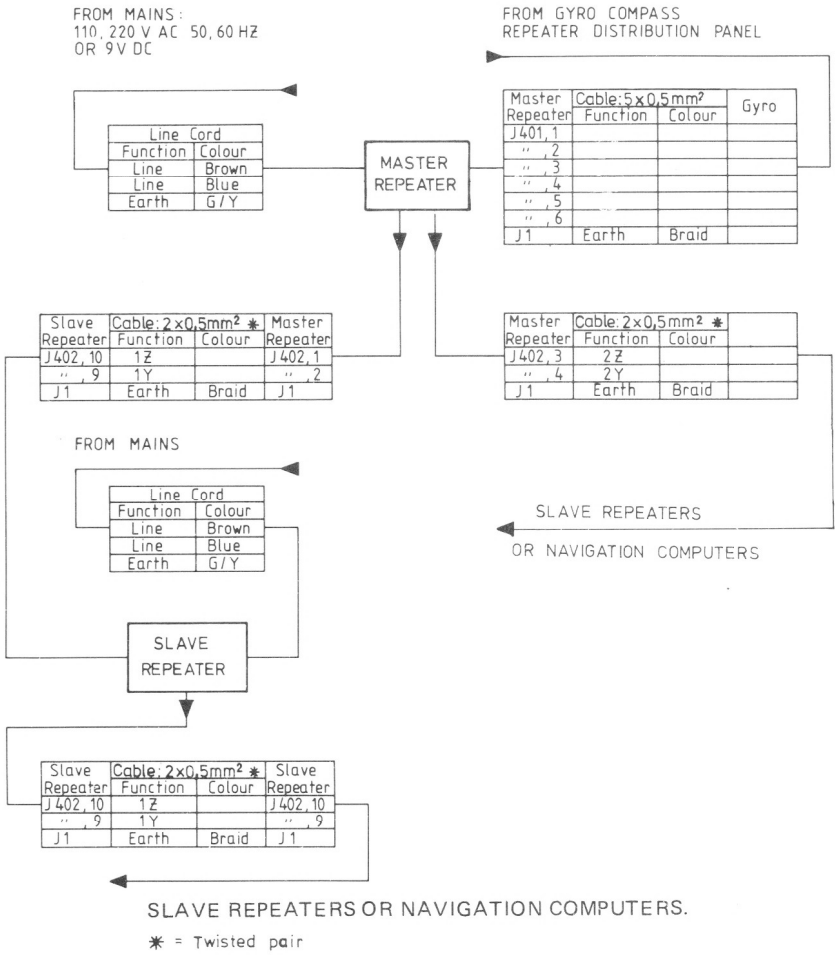

NOTE! If no mechanical repeaters are connected to gyros having stepper type transmission external load resistors must be provided and wired from S_1, S_2 and S_3 to + or − ref. as appropriate. Suitable resistors are:
Transmission voltage 35V: 270 ohms 10W
Transmission voltage 70V: 1k5 ohms 5W

Fig. 4.5.

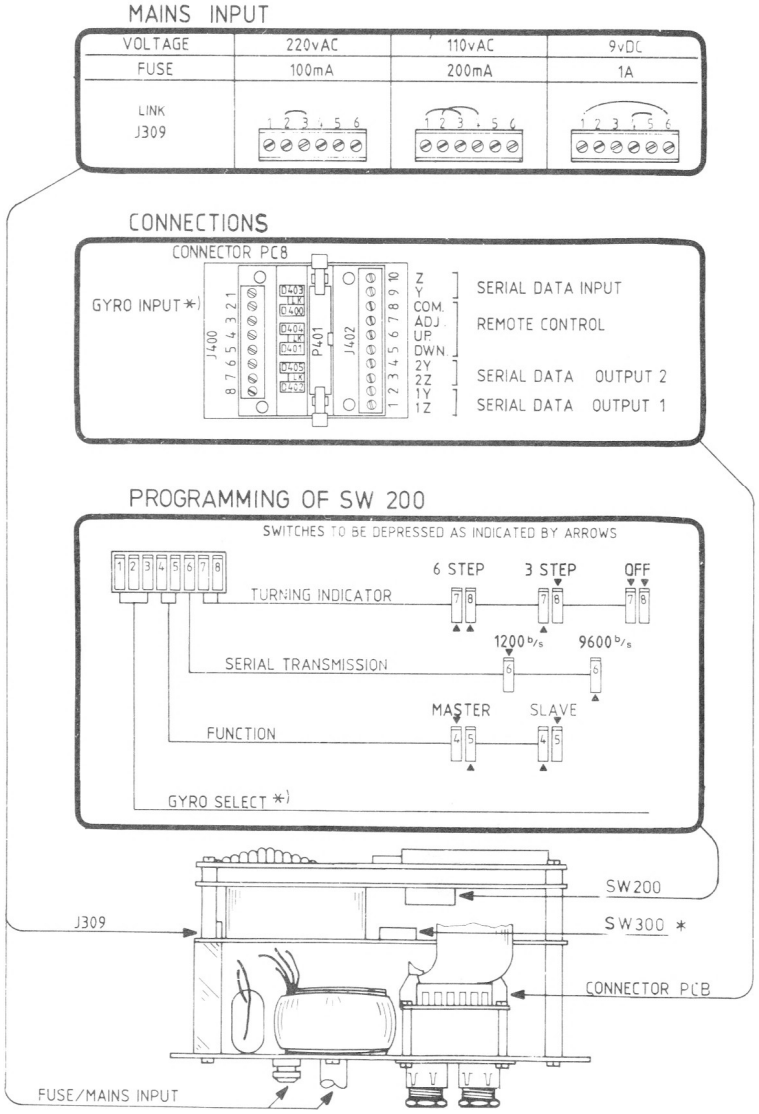

* *SEE GYRO TABLES*

TYPE LR40 A

Fig. 4.6.

GYRO COMPASSES:

STEPPER TYPE TRANSMISSION: VOLTAGE: 35 VDC + REF. (UNFILTERED)

SPERRY: MK20, MK37 (MODEL 0 AND 1)

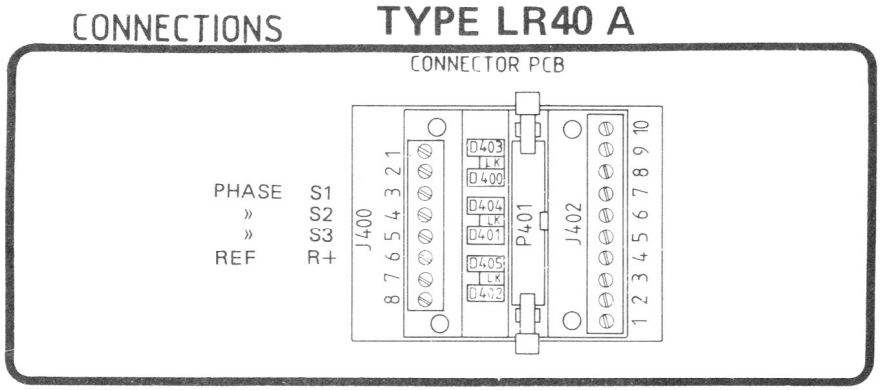

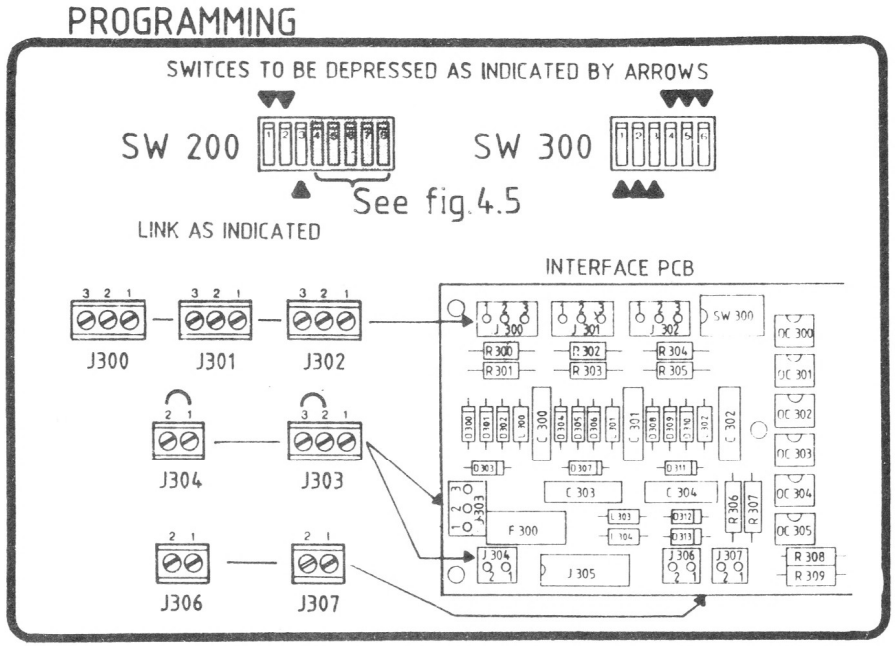

Fig. 4.7. **GYRO COMPASSES:**

STEPPER TYPE TRANSMISSION, VOLTAGE: 24 TO 35 VDC, + REF.

BROWN:	MK10 (24V), SGB 1000(35V)
PLATH:	NAVIGAT VII (24 OR 35V)
RACAL DECCA:	RDMK7 (24 OR 35V)
ROBERTSON:	RPG90 (24 OR 35V)
SPERRY:	SP120 (35V), SR220 (35V) MK37 (35V MODELL D and E)
TOKYO-KEIKI:	TG300 (35V), TG5000 (35V)

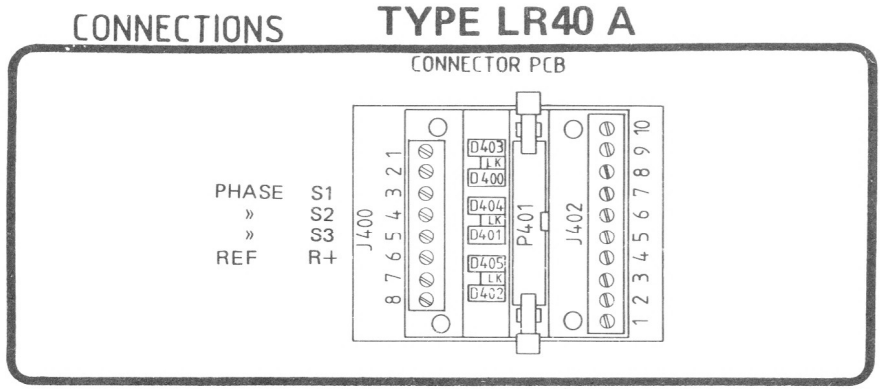

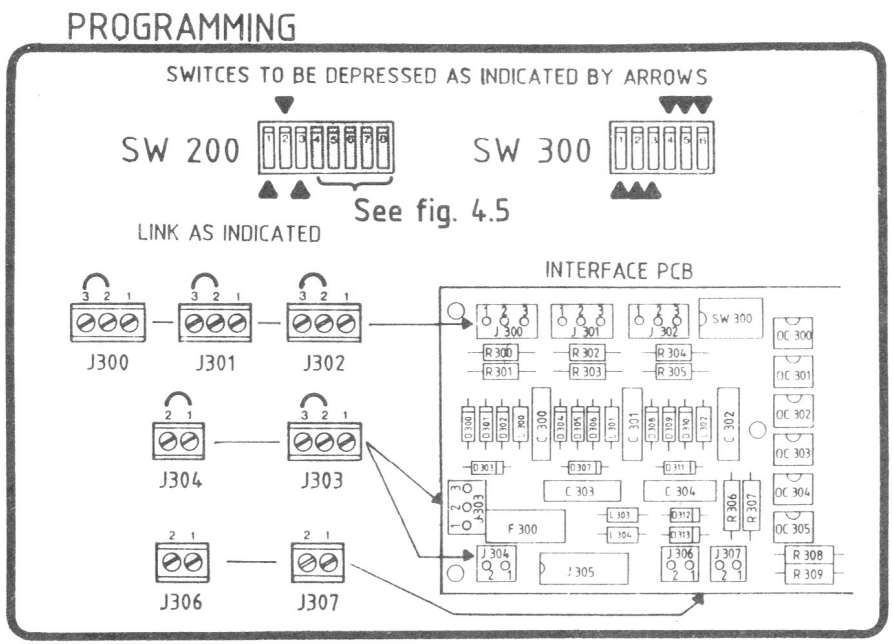

Fig. 4.8. **GYRO COMPASSES:**

STEPPER TYPE TRANSMISSION, VOLTAGE: 50 TO 70 VDC, + REF

BROWN:	MK10 (50V), SGB1000 (50 OR 70V)
PLATH:	NAVIGAT VII (50 OR 70V)
RACAL DECCA:	RDMK7 (50 OR 70V)
ROBERTSON:	RPG90 (50 OR 70V)
SPERRY:	SP130 (70V), SR230 (70V) MK37 (50 OR 70V)
TOKYO-KEIKI:	TG300 (70V), TG5000 (70V)
SPERRY:	MK37 (50 OR 70V MODEL D AND E)

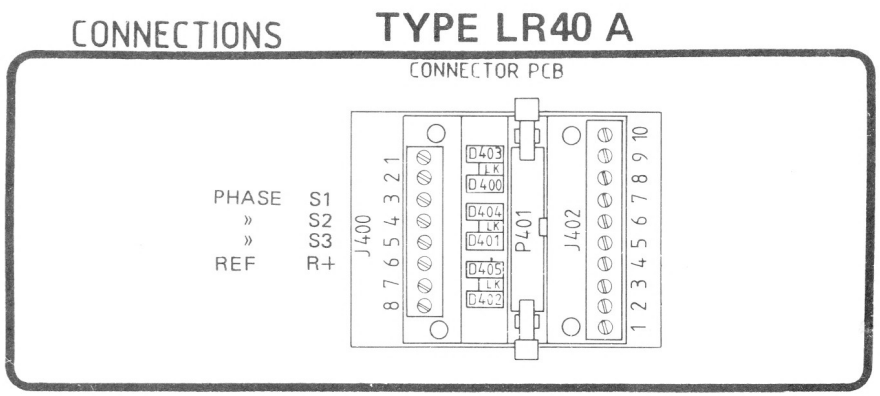

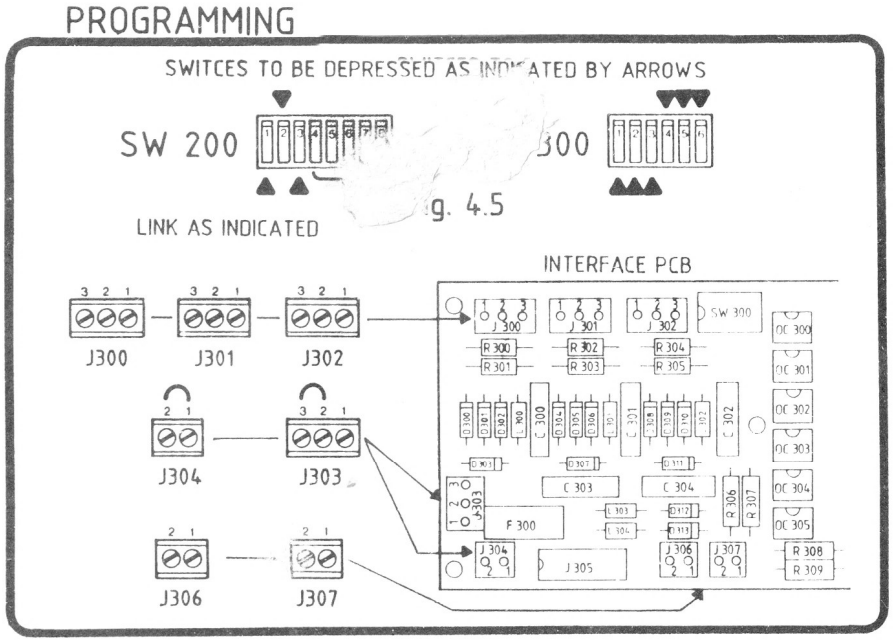

Fig 4.9.

GYRO COMPASSES:

STEPPER TYPE TRANSMISSION:

VOLTAGE: 70 VDC, NEG. REF.

SPERRY: MK227

CONNECTIONS TYPE LR40 A

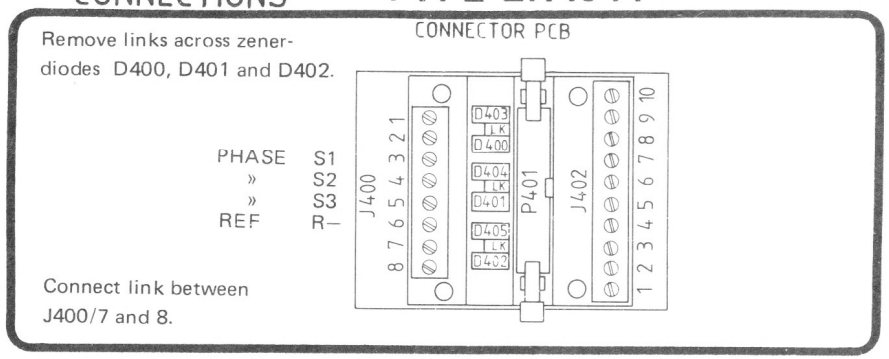

PROGRAMMING

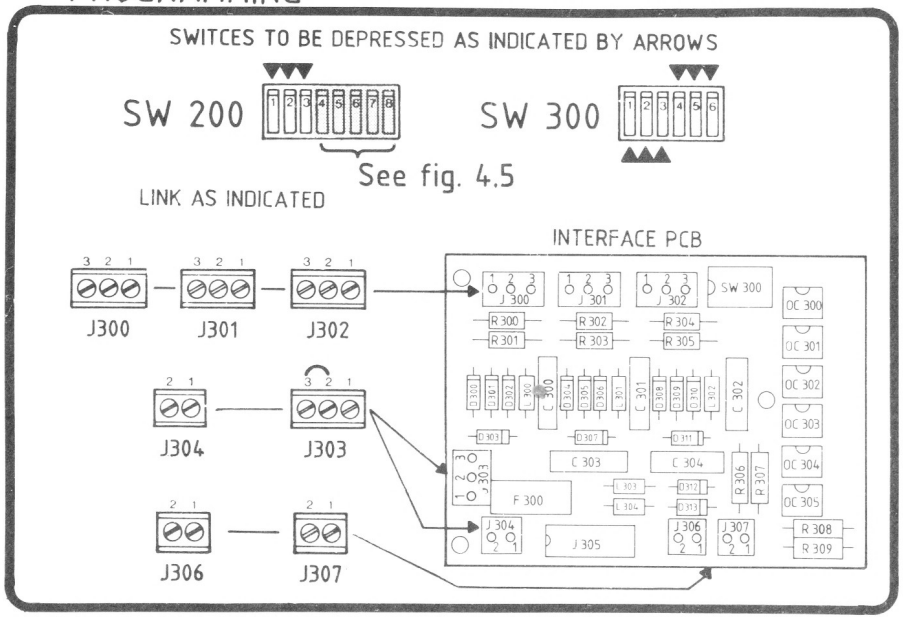

Fig 4.10.

GYRO COMPASSES:

STEPPER TYPE TRANSMISSION:

VOLTAGE: 35 VDC, NEG. REF.

CONNECTIONS TYPE LR40 A

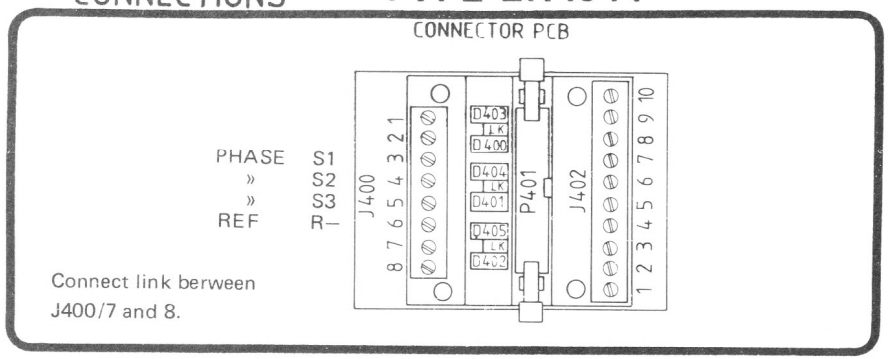

PROGRAMMING

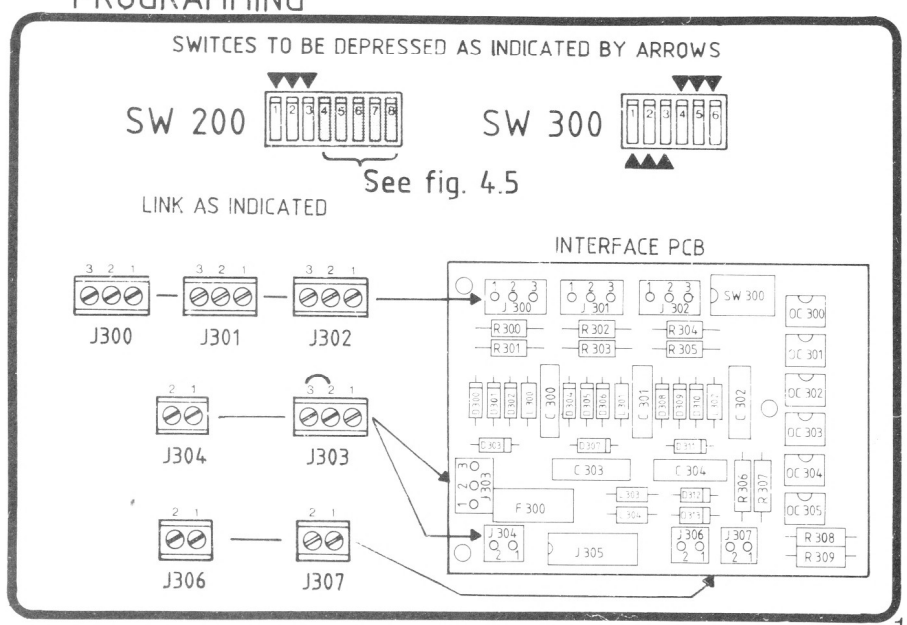

GYRO COMPASSES:

SYNCRO TYPE TRANSMISSION

REF. VOLTAGE: 50-60 VAC
PHASE VOLTAGE: 20-24 VAC

ANSCHUTZ: STD. 4, 6, 12, 14

CONNECTIONS TYPE LR40 A

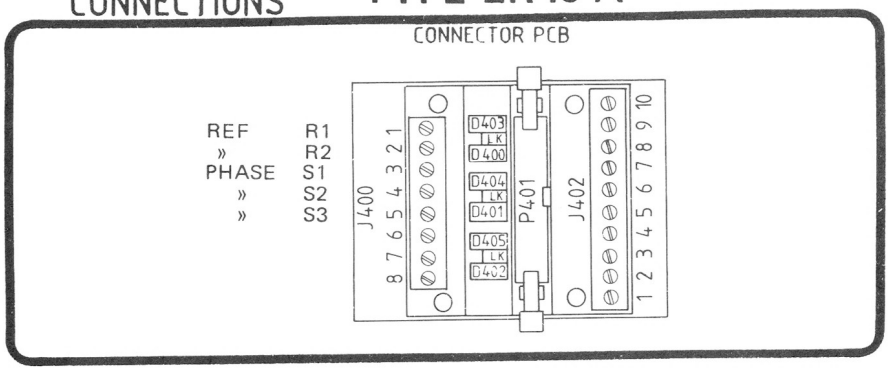

PROGRAMMING

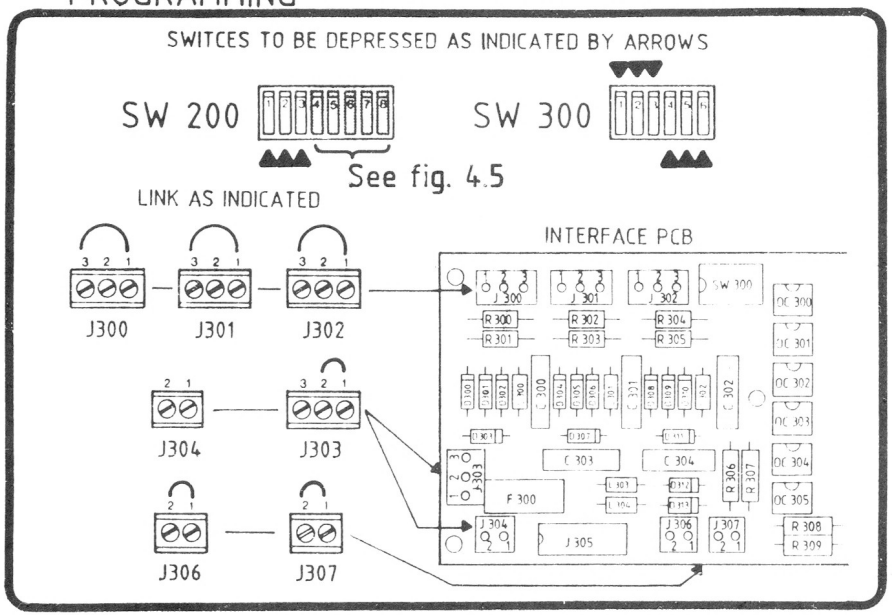

GYRO COMPASSES:

SYNCHRO TYPE TRANSMISSION

REF.VOLTAGE: 50-60 VAC
PHASE VOLTAGE: 68-90 VAC

HOKUSHIN: C1, C2, C3
PLATH: NAVIGAT II, III

CONNECTIONS TYPE LR40 A

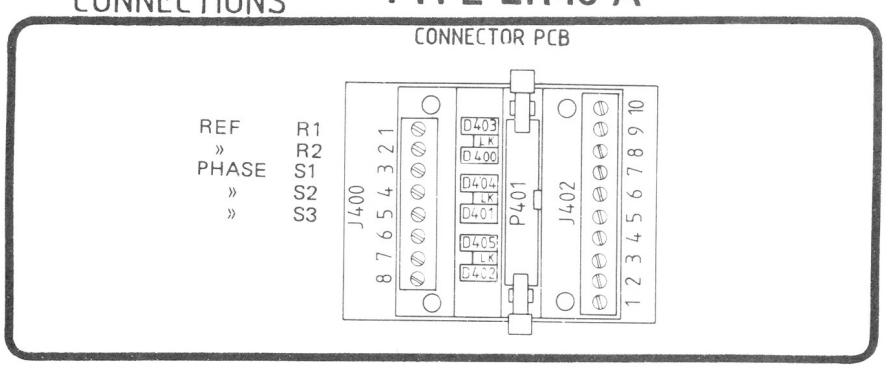

PROGRAMMING

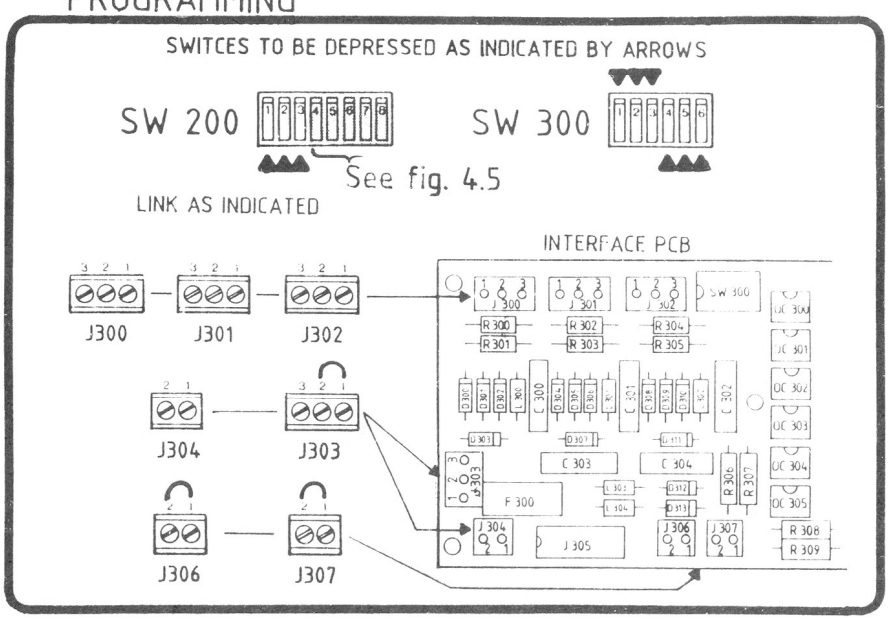

Fig. 4.13.

GYRO COMPASSES:

SYNCHRO TYPE TRANSMISSION
REF.VOLTAGE: 110-115 VAC
PHASE VOLTAGE: 68-90 VAC

HOKUSHIN: CMZ 102
MICROTECNICA: MB12, MB19

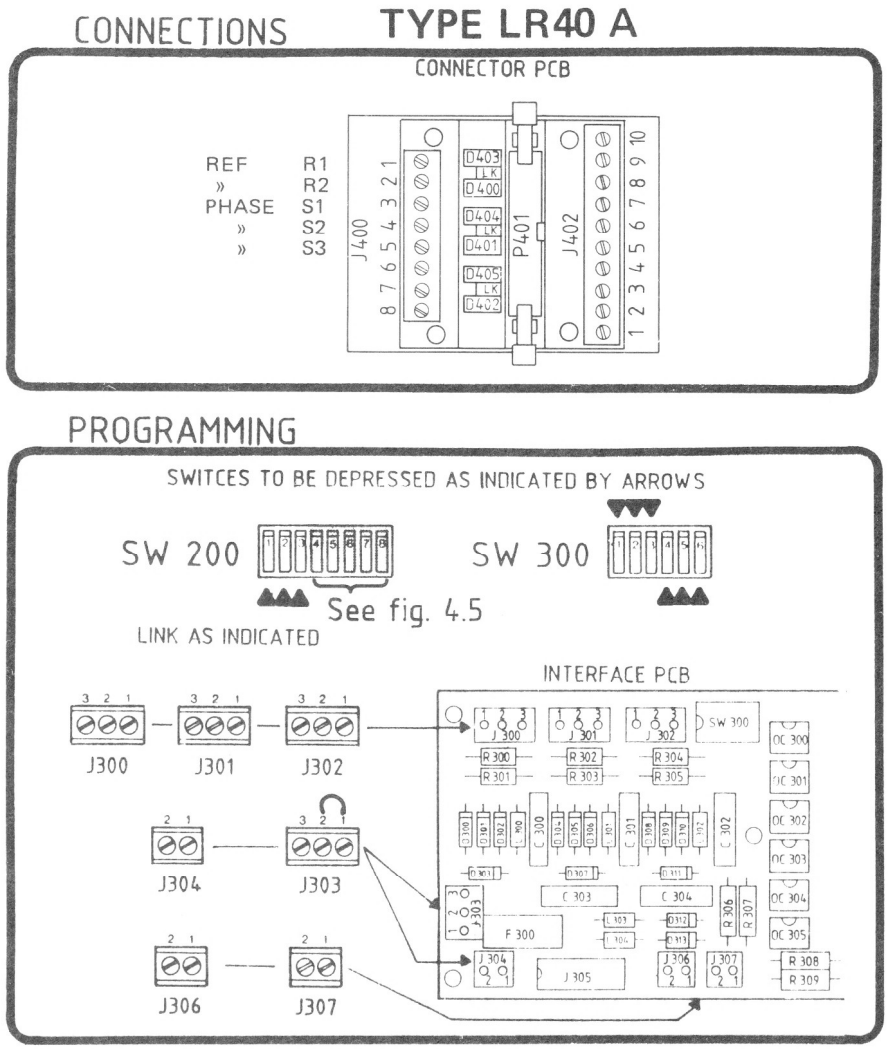

Fig 4.14.

GYRO COMPASSES:

MICROTECNICA: POLARIS MB20 CONTROL UNIT 2
(POLARIS MB20 WITH CONTROL UNIT 1
SEE FIG. 4.17)

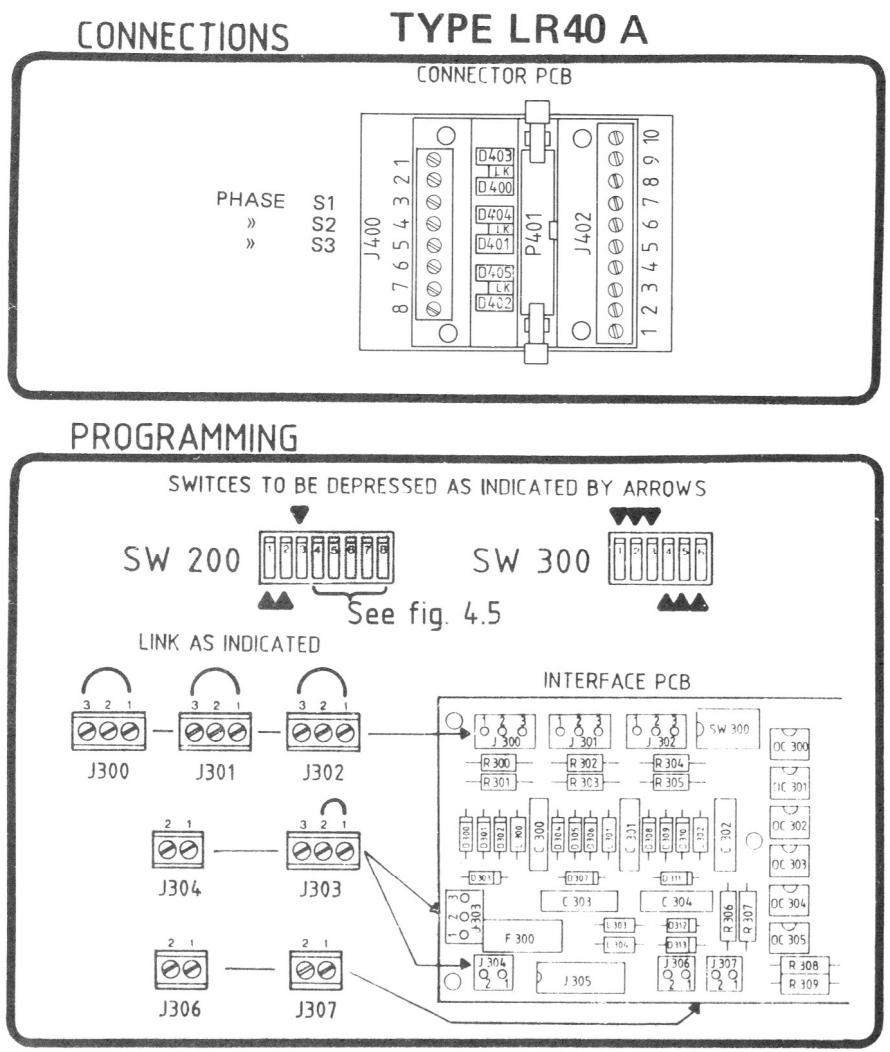

Fig. 4.15

GYRO COMPASSES:

ANSCHUTZ: GYROSTAR (STEP MOTOR OUTPUT)

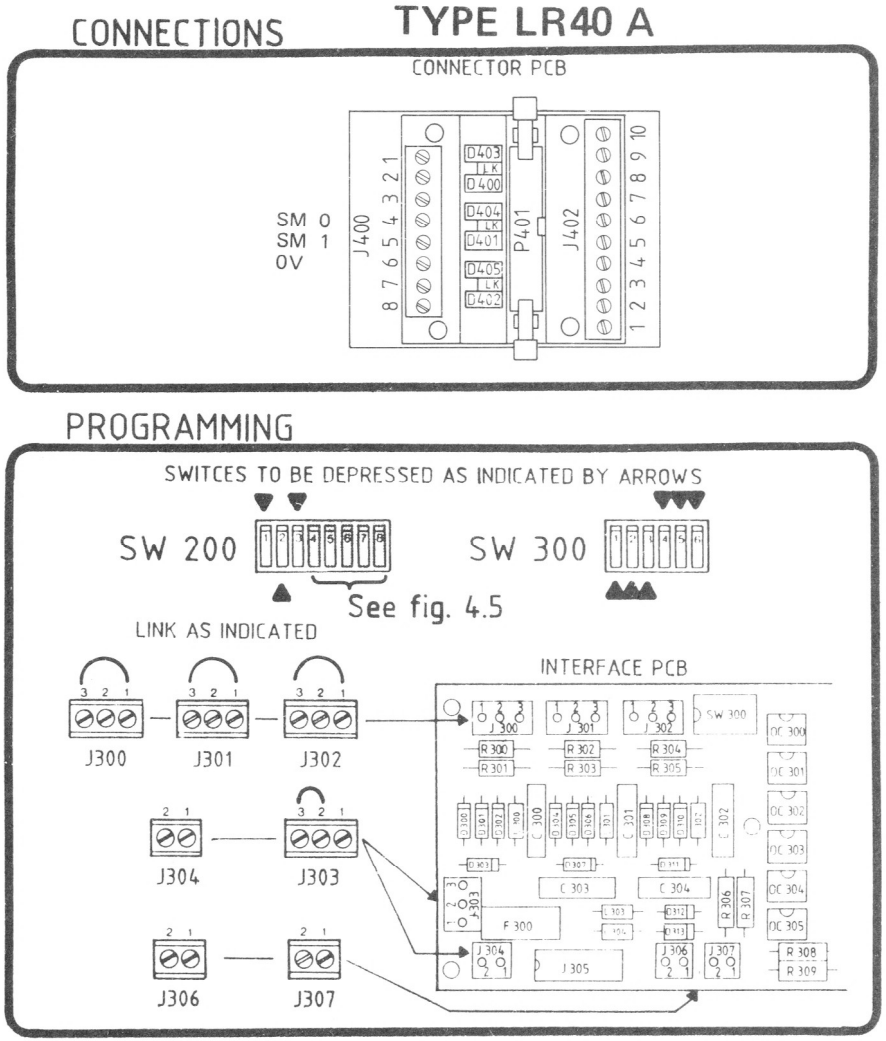

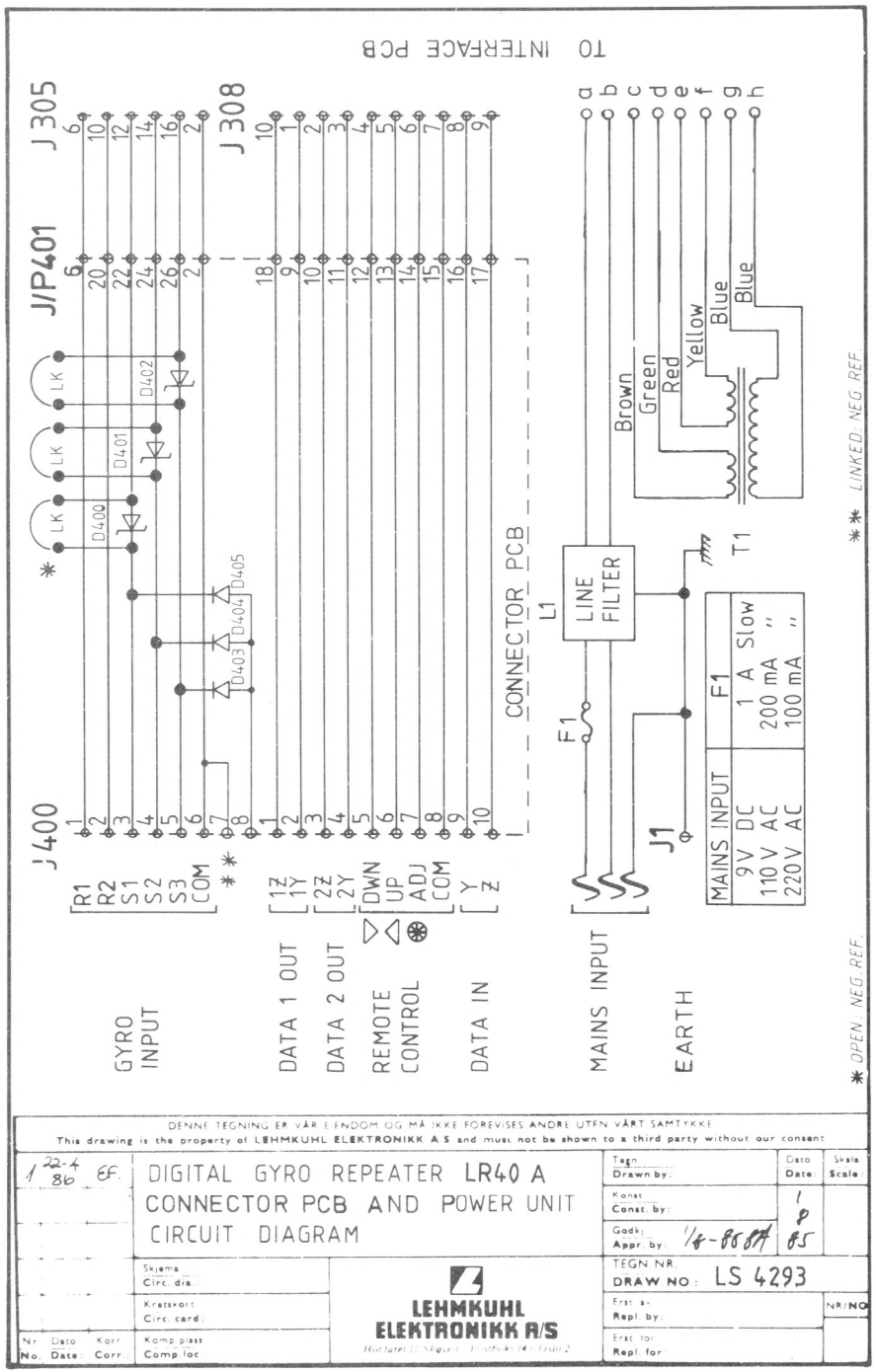

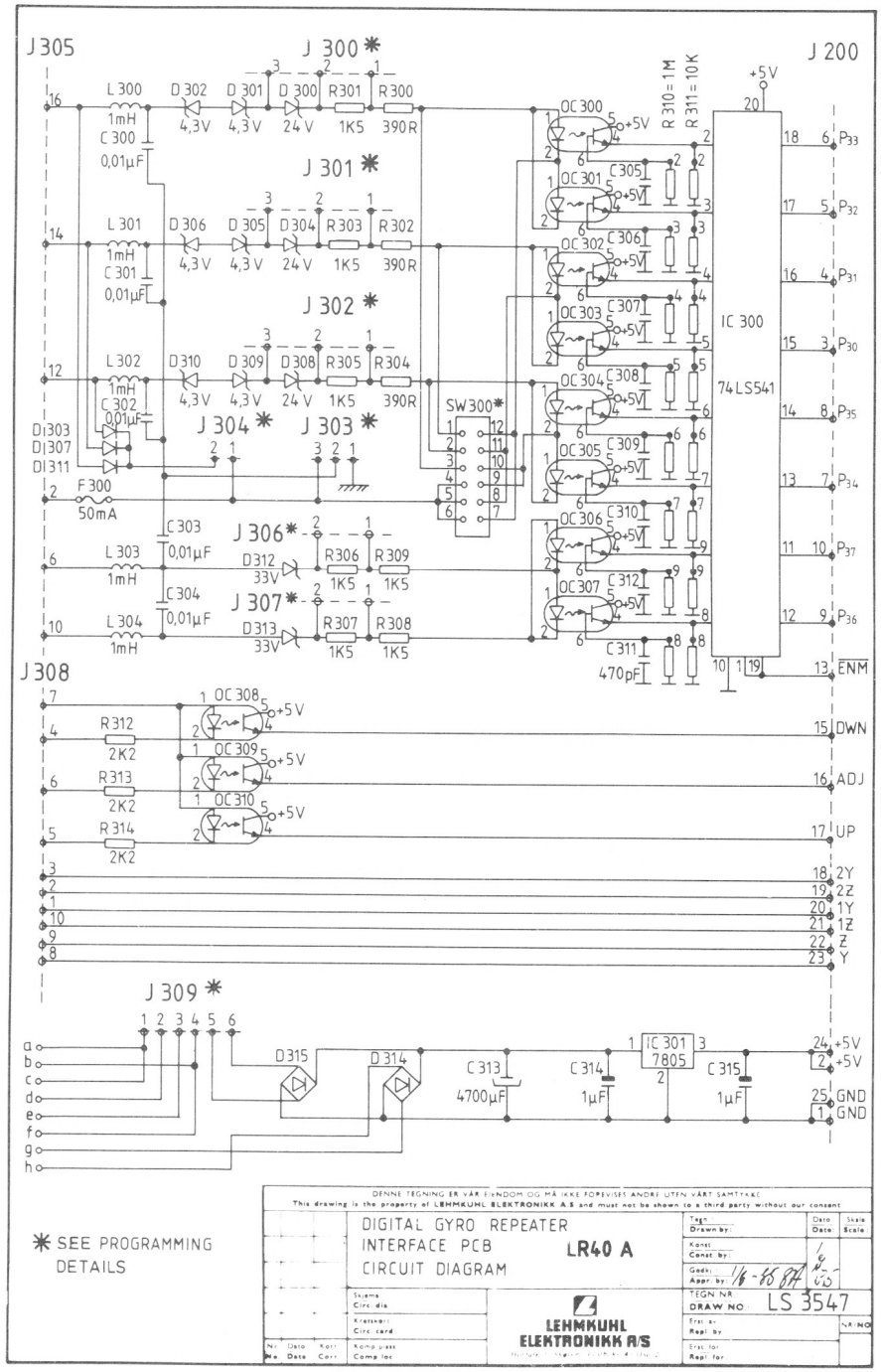
J305
J 300 *
J 301 *
J 302 *
J 304 *
J 303 *
J 306 *
J 307 *
J 308
J 309 *
J 200
IC 300
74LS541
SW300*
IC 301
7805
* SEE PROGRAMMING DETAILS
DIGITAL GYRO REPEATER
INTERFACE PCB
CIRCUIT DIAGRAM
LR40 A
LEHMKUHL ELEKTRONIKK A/S
LS 3547

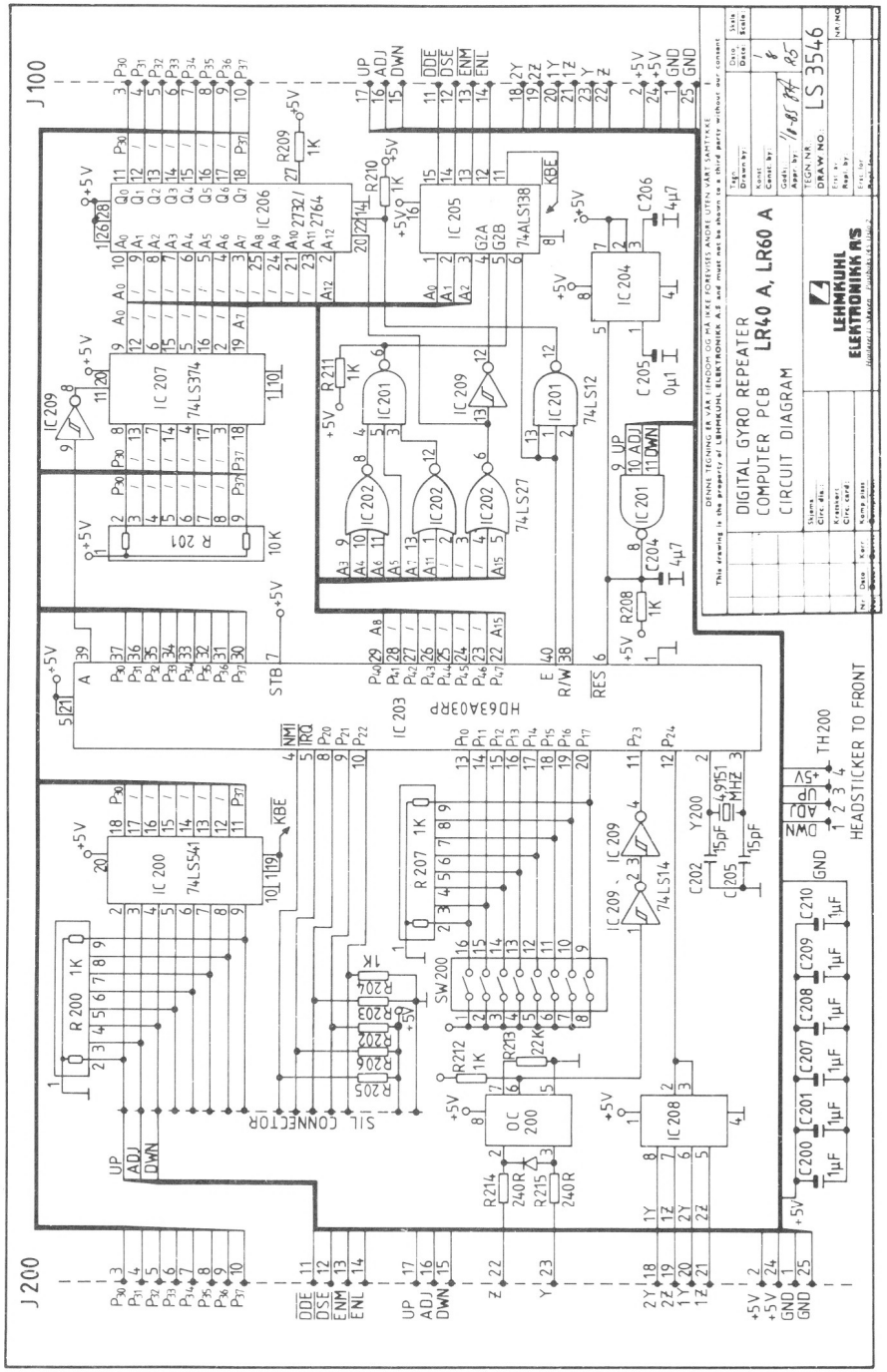
J 100
J 200
DIGITAL GYRO REPEATER
COMPUTER PCB
CIRCUIT DIAGRAM
LR40 A, LR60 A
LEHMKUHL ELEKTRONIKK A/S
LS 3546
HD63A03RP
SIL CONNECTOR
HEADSTICKER TO FRONT

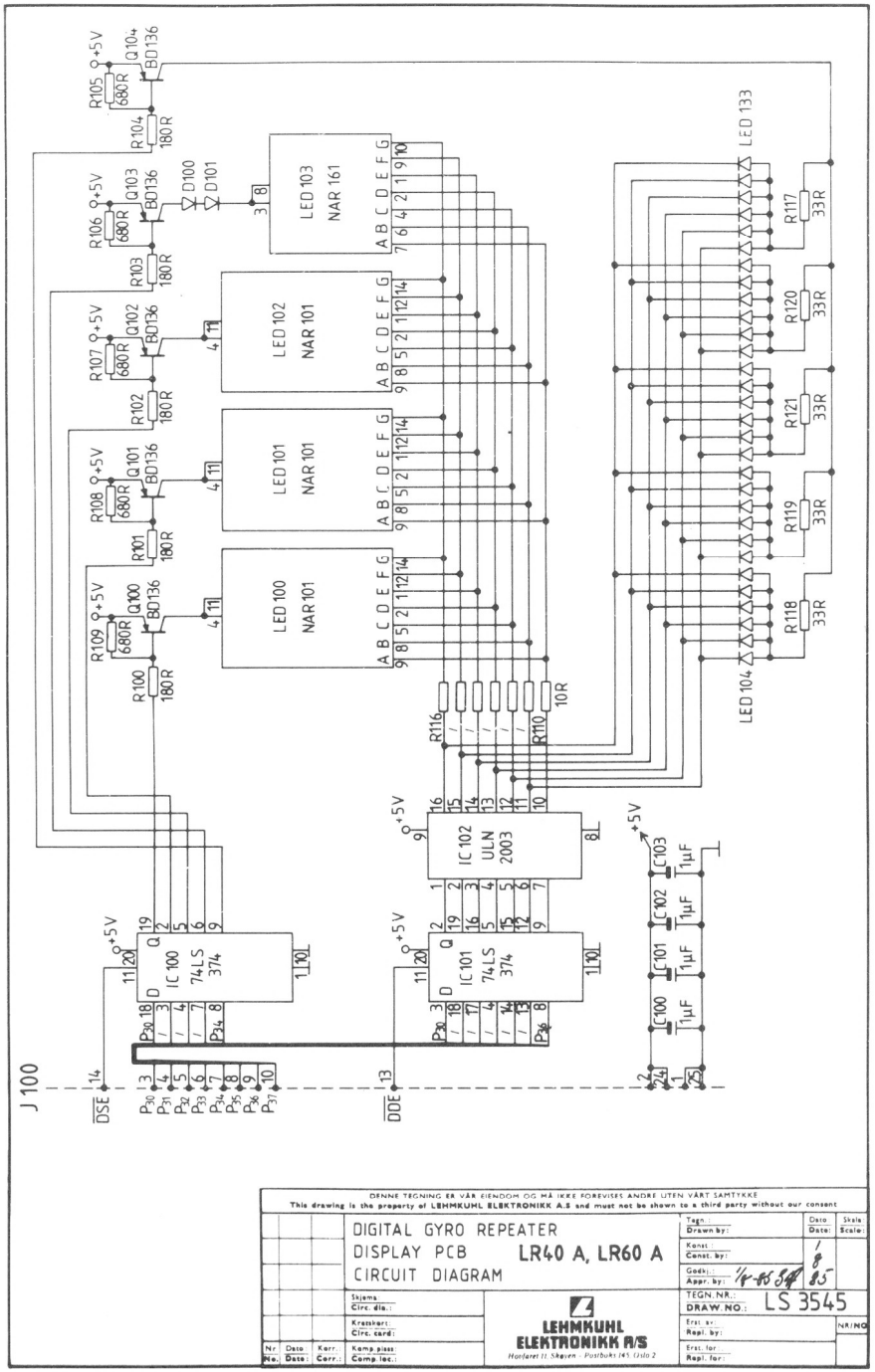
DENNE TEGNING ER VÅR EIENDOM OG MÅ IKKE FOREVISES ANDRE UTEN VÅRT SAMTYKKE
This drawing is the property of LEHMKUHL ELEKTRONIKK A.S and must not be shown to a third party without our consent
DIGITAL GYRO REPEATER
DISPLAY PCB LR40 A, LR60 A
CIRCUIT DIAGRAM
LS 3545
LEHMKUHL ELEKTRONIKK A/S
Hørfaret 11 Skøyen - Postbuks 145 Oslo 2

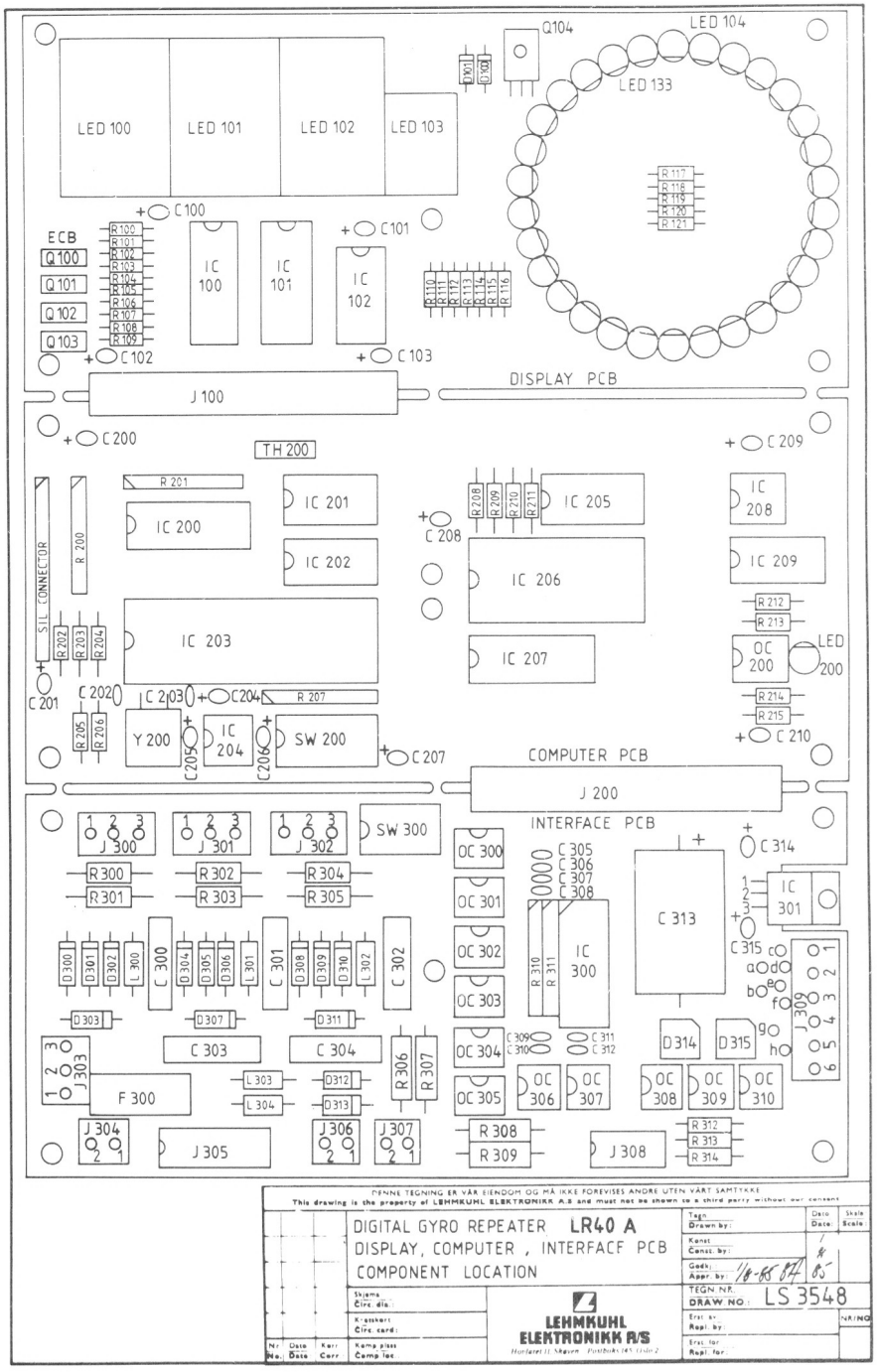
DISPLAY PCB
COMPUTER PCB
INTERFACE PCB
DENNE TEGNING ER VÅR EIENDOM OG MÅ IKKE FOREVISES ANDRE UTEN VÅRT SAMTYKKE
This drawing is the property of LEHMKUHL ELEKTRONIKK A.S and must not be shown to a third party without our consent
DIGITAL GYRO REPEATER LR40 A
DISPLAY, COMPUTER, INTERFACE PCB
COMPONENT LOCATION
LS 3548
LEHMKUHL ELEKTRONIKK A/S
Hørfaret 11 Skøyen - Postbuks 145 Oslo 2

Fig. 4.16

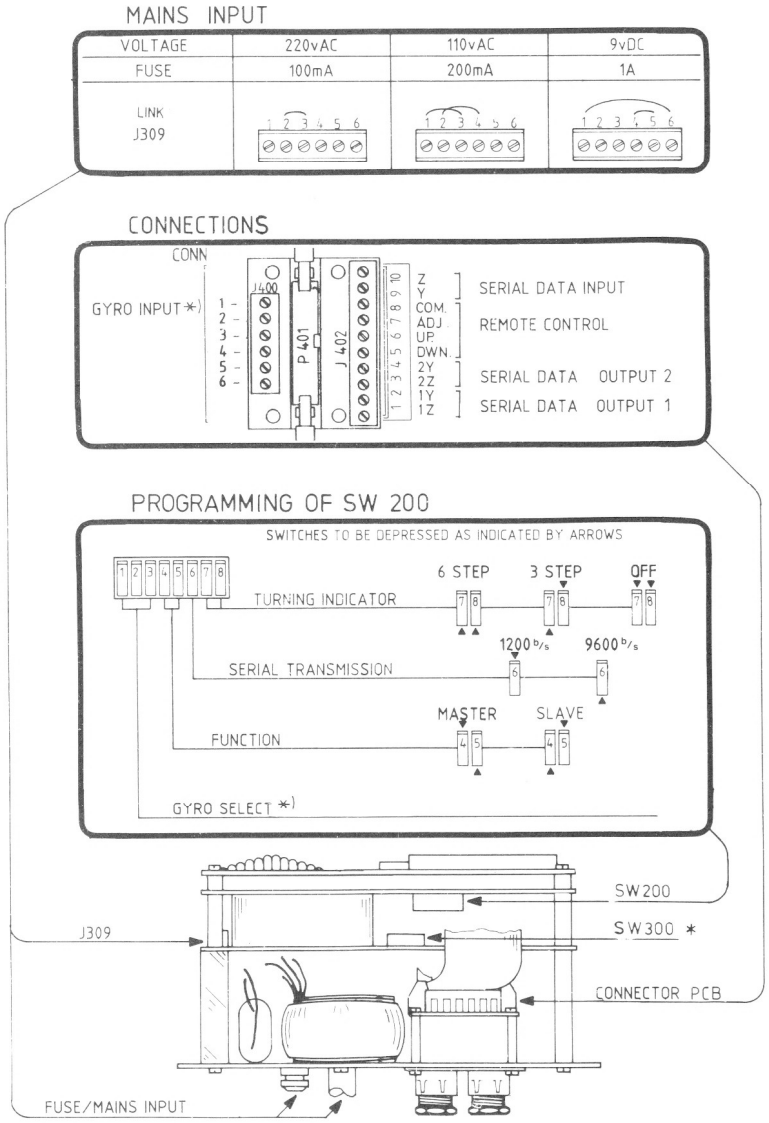

TYPE LR60 A

* SEE GYRO TABLES

Fig 4.17.

GYRO COMPASSES:

SYNCHRO TYPE TRANSMISSION, RATIO 1:1

LR60B-L: 26/11. 8VAC, 400 HZ
LR60B-H: 115/90 VAC, 400HZ

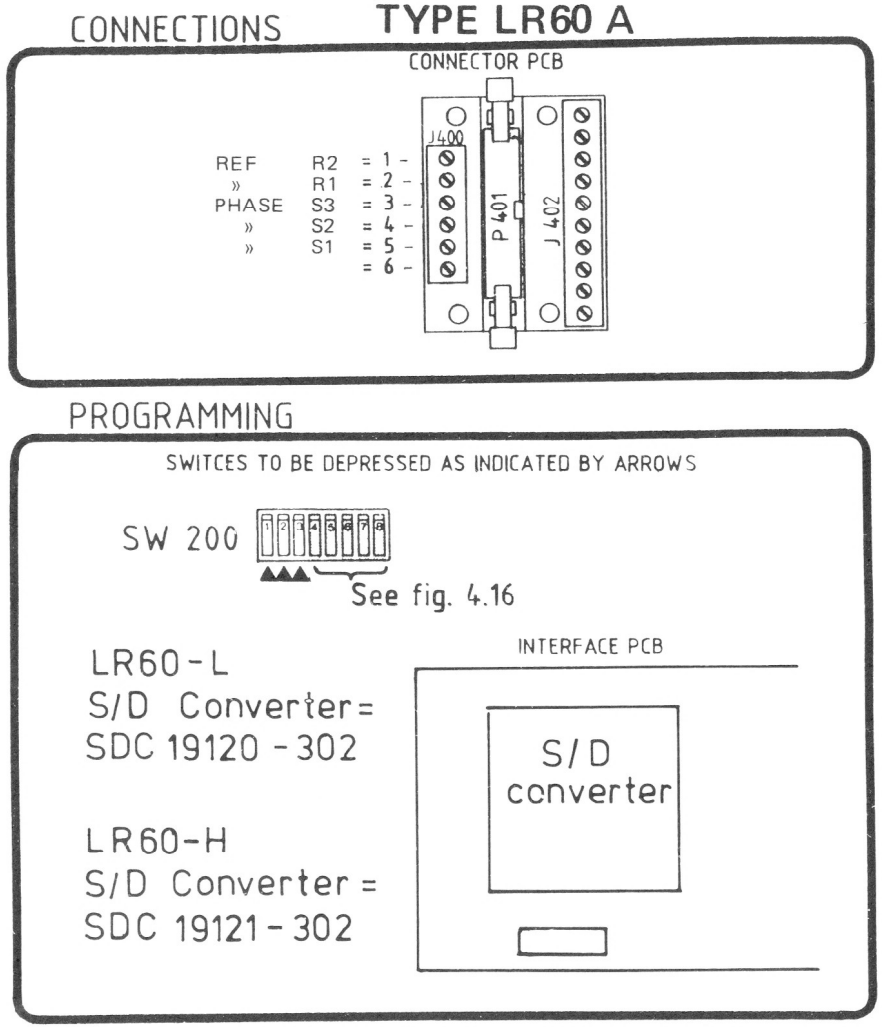

Fig 4.18.

GYRO COMPASSES:

SYNCHRO TYPE TRANSMISSION, RATIO 36:1

LR60A-L: 26/11. 8 VAC, 400 HZ
LR60A-H: 115/90. VAC, 400 HZ

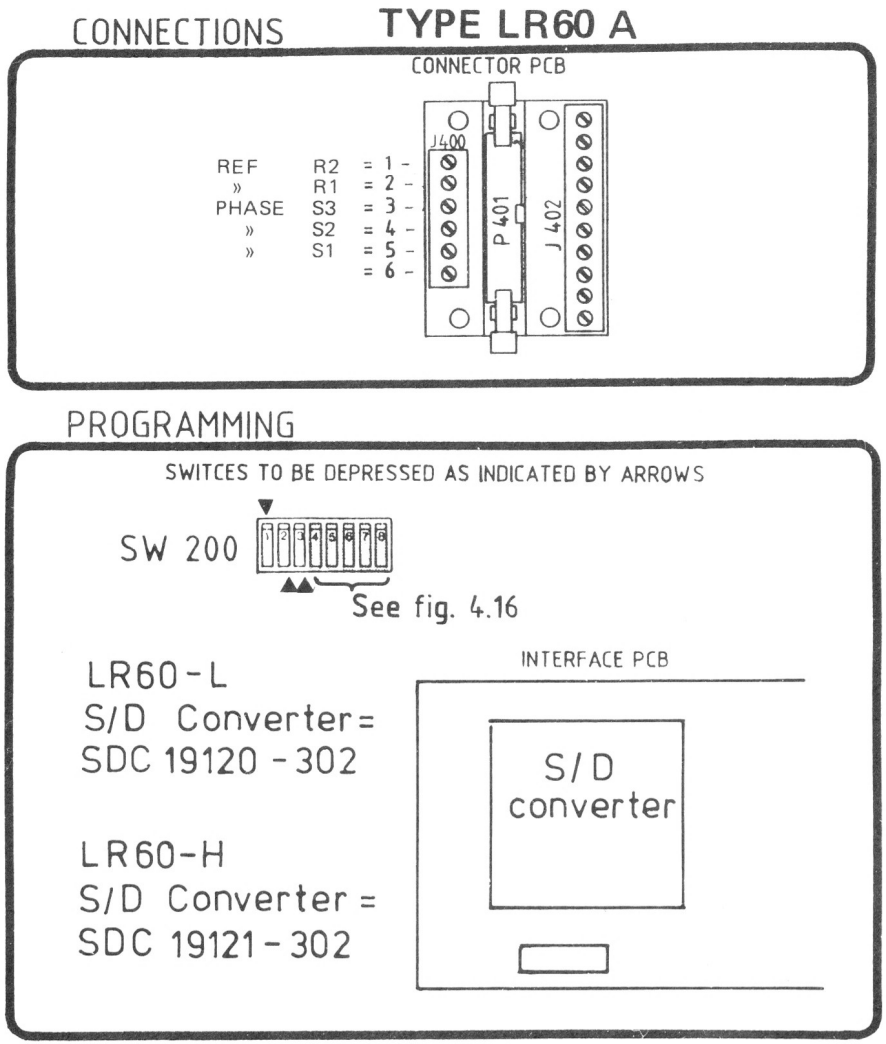

Fig 4.19.

GYRO COMPASSES:

SYNCHRO TYPE TRANSMISSION, RATIO 90:1

LR60A-L: 26/11, 8 VAC, 400 HZ
LR60A-H: 115/90, VAC, 400 HZ

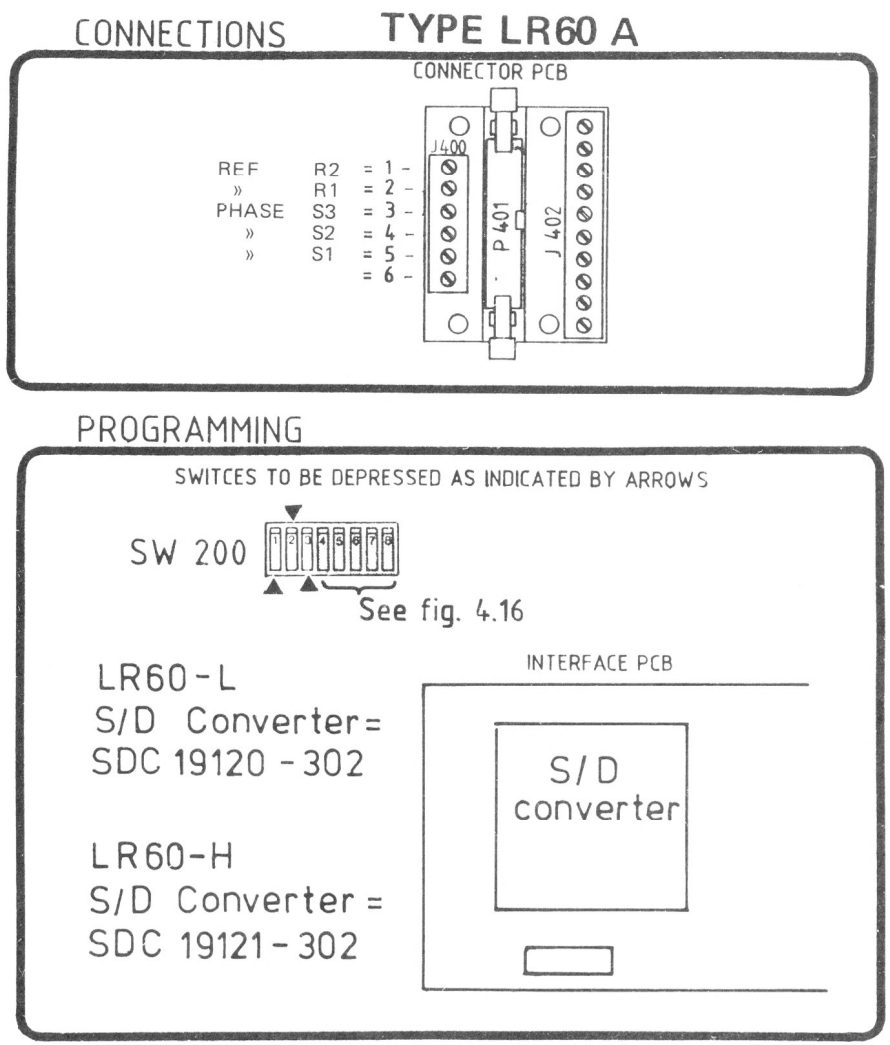

Fig 4.20.

GYRO COMPASSES:

SYNCHRO TYPE TRANSMISSION: RATIO 180:1

LR60A-L: 26/11, 8 VAC, 400 HZ
LR60A-H: 115/90, VAC, 400 HZ

CONNECTIONS **TYPE LR60 A**

CONNECTOR PCB

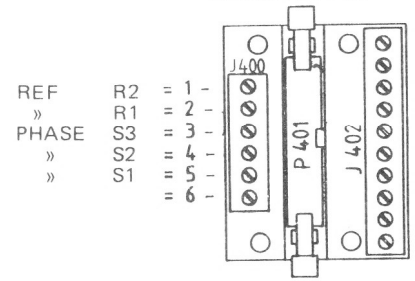

PROGRAMMING

SWITCES TO BE DEPRESSED AS INDICATED BY ARROWS

SW 200

See fig. 4.16

LR60-L
S/D Converter=
SDC 19120-302

LR60-H
S/D Converter =
SDC 19121-302

INTERFACE PCB

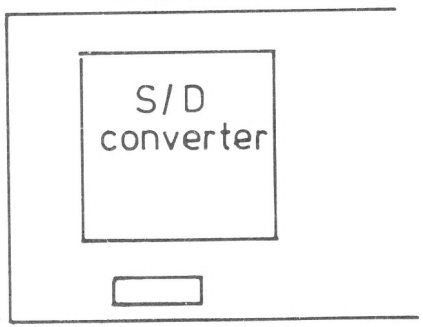

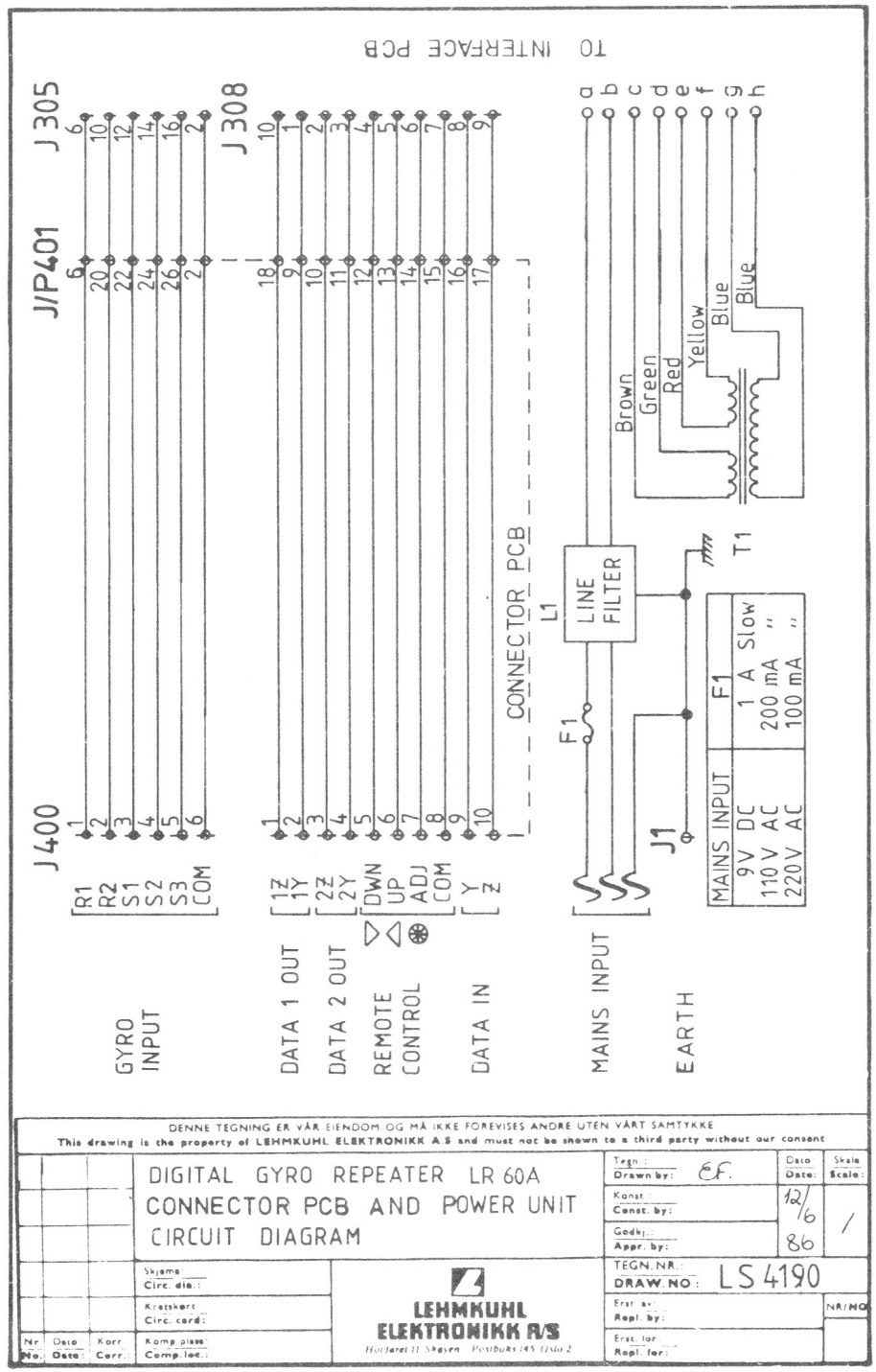

DENNE TEGNING ER VÅR EIENDOM OG MÅ IKKE FOREVISES ANDRE UTEN VÅRT SAMTYKKE
This drawing is the property of LEHMKUHL ELEKTRONIKK A.S and must not be shown to a third party without our consent

DIGITAL GYRO REPEATER LR 60A
CONNECTOR PCB AND POWER UNIT
CIRCUIT DIAGRAM

Tegn.: Drawn by: EF. Dato: Date: 12/6 86 Skala: Scale: 1

Konst.: Const. by:
Godkj.: Appr. by:

Skjema: Circ. dia.:
Kretskort: Circ. card:
Komp. plass: Comp. loc.:

LEHMKUHL ELEKTRONIKK A/S
Hovfaret 11 Skøyen Postboks 145 Oslo 2

TEGN. NR.: DRAW. NO: LS 4190

Erst. av: Repl. by:
Erst. for: Repl. for:
NR/NO

Nr. No. Dato Date: Korr. Corr.:

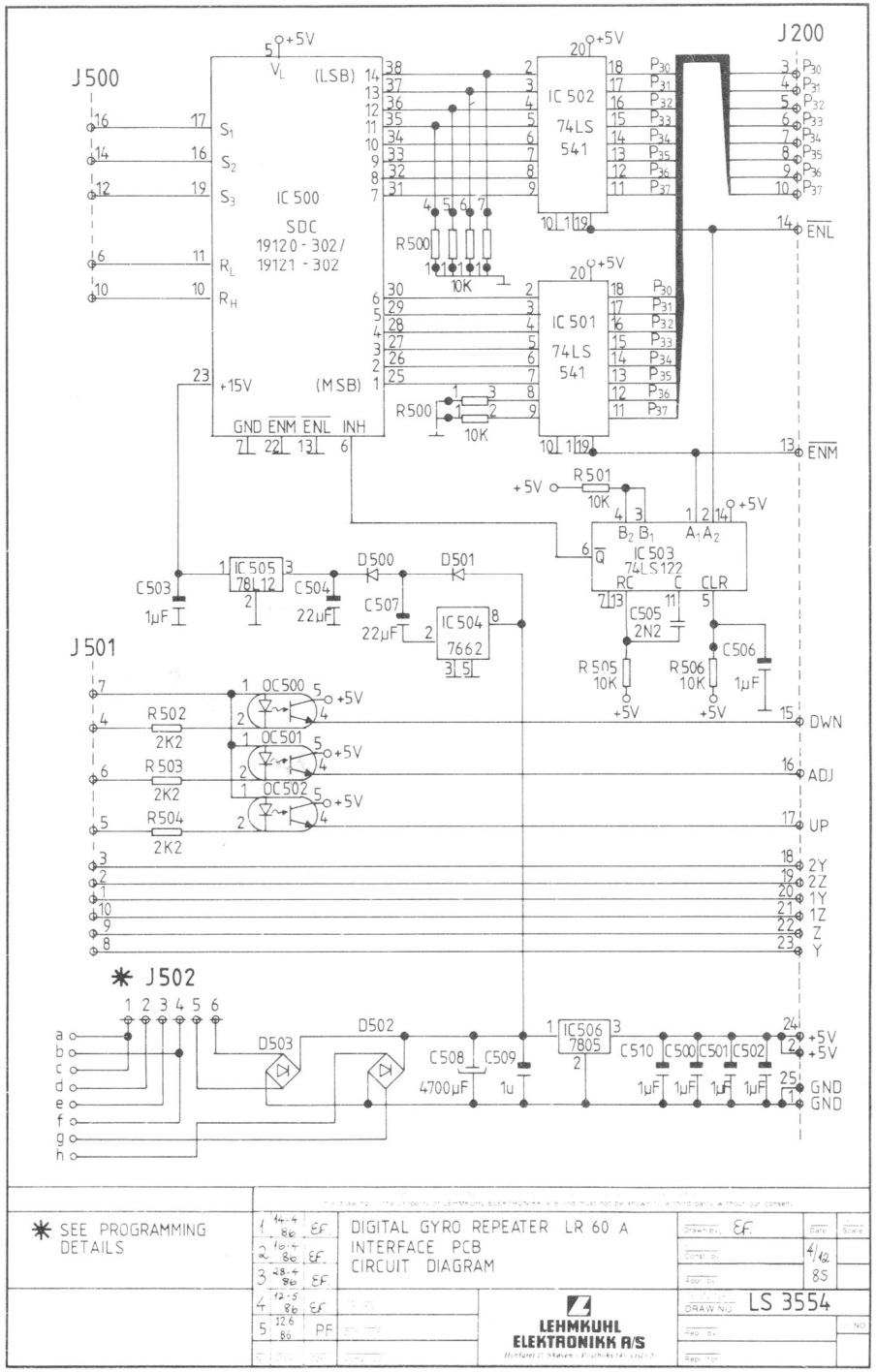
J500
J200
J501
J502
IC 500
SDC
19120 - 302/
19121 - 302
IC 502
74LS
541
IC 501
74LS
541
IC 503
74LS122
IC 505
78L12
IC 504
7662
IC 506
7805
OC500
OC501
OC502
D500
D501
D502
D503
R500
10K
R501
10K
R502
2K2
R503
2K2
R504
2K2
R505
10K
R506
10K
C503
1µF
C504
22µF
C507
22µF
C505
2N2
C506
1µF
C508
4700µF
C509
1u
C510
1µF
C500
C501
C502
ENL
ENM
DWN
ADJ
UP
2Y
2Z
1Y
1Z
Z
Y
+5V
GND
✱ SEE PROGRAMMING DETAILS
DIGITAL GYRO REPEATER LR 60 A
INTERFACE PCB
CIRCUIT DIAGRAM
LS 3554
LEHMKUHL
ELEKTRONIKK A/S

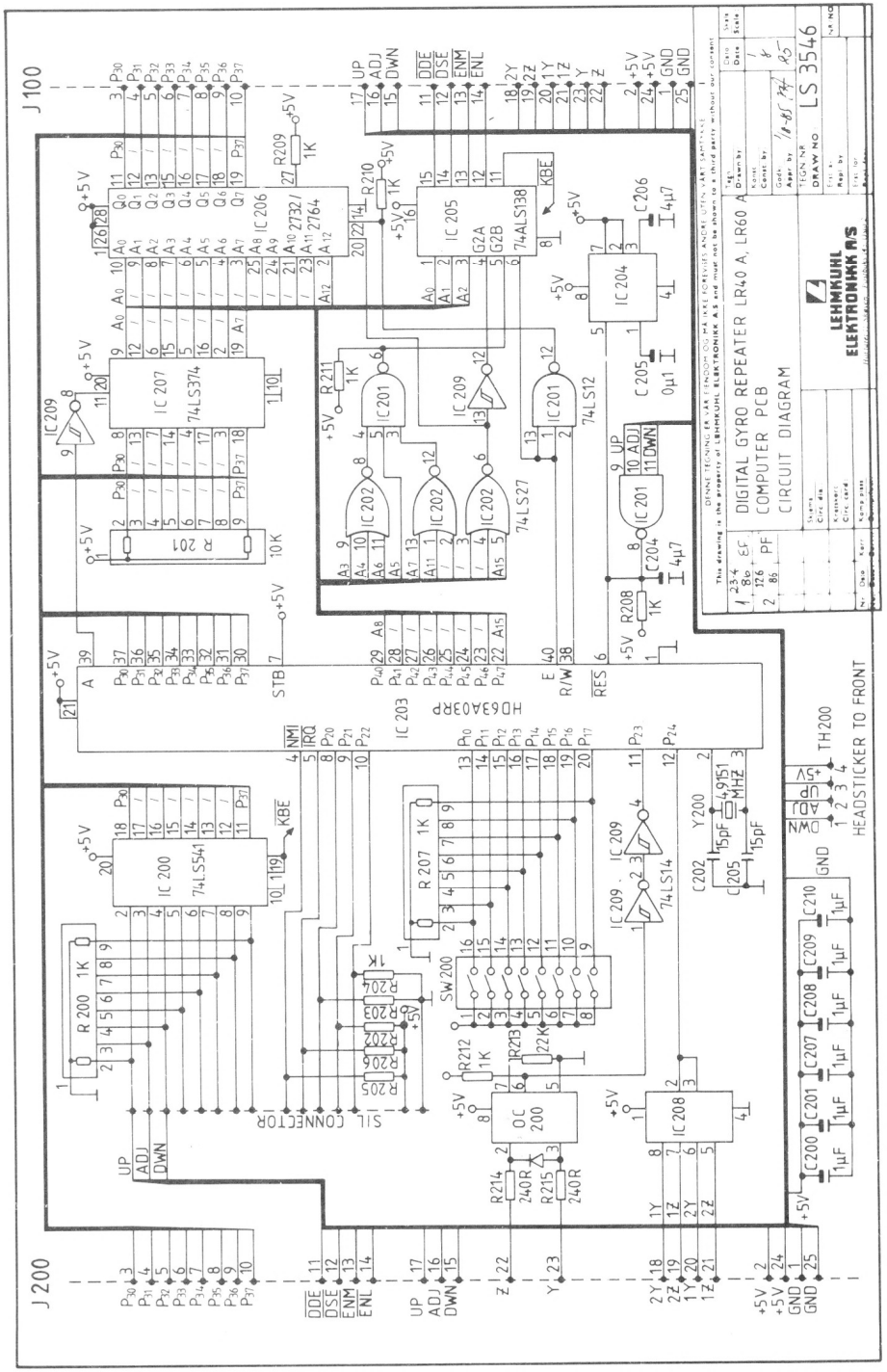
J100
J200
IC 206
IC 205
IC 204
IC 207
74LS374
IC 201
IC 202
IC 209
74LS27
74LS12
IC 203
HD63A03RP
IC 200
74LS541
IC 208
OC 200
SW200
SIL CONNECTOR
HEADSTICKER TO FRONT
TH200
Y200
DIGITAL GYRO REPEATER LR40 A, LR60 A
COMPUTER PCB
CIRCUIT DIAGRAM
LS 3546
LEHMKUHL
ELEKTRONIKK A/S

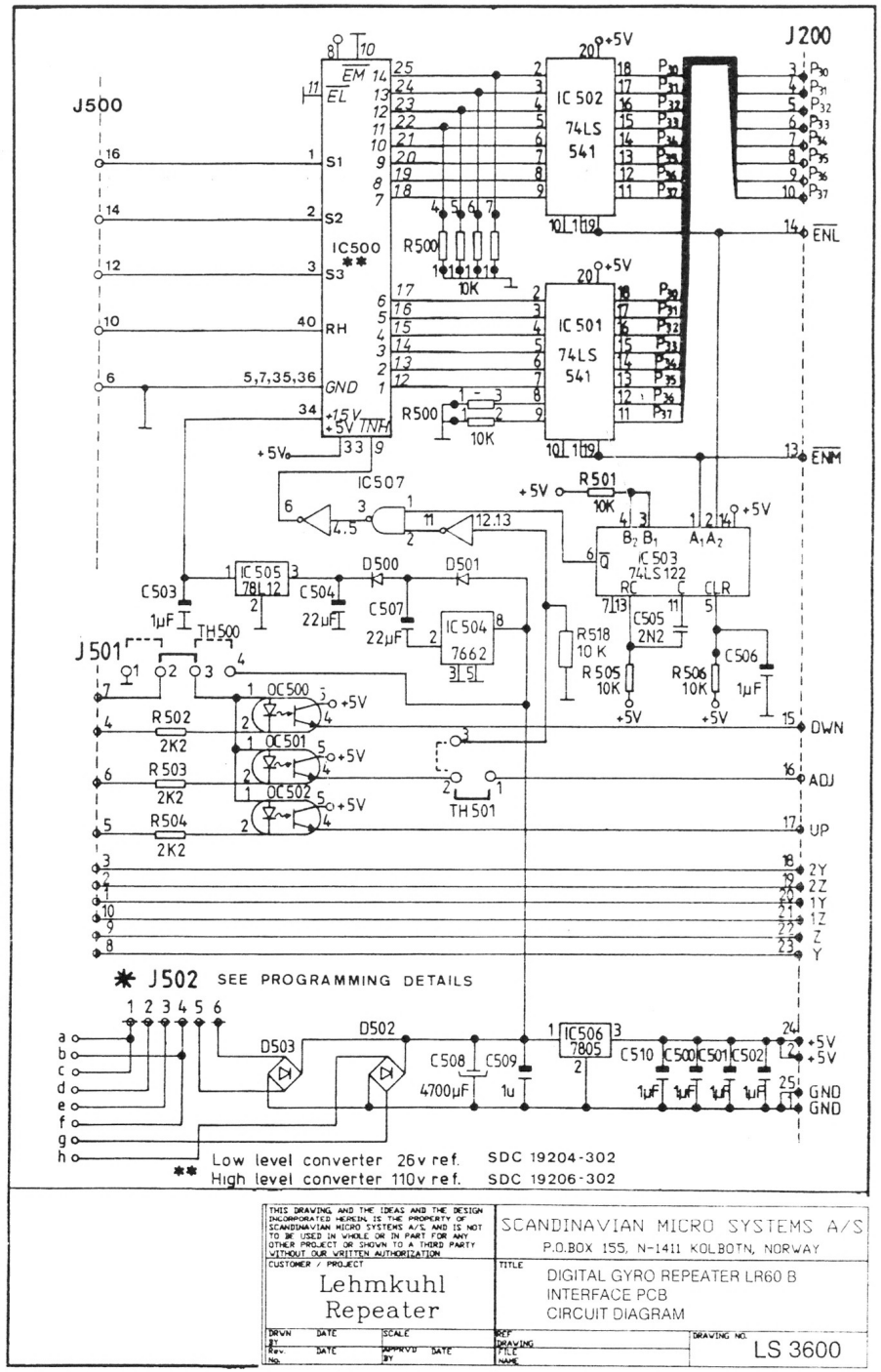
J500
J200
IC500
IC 502 74LS 541
IC 501 74LS 541
IC507
IC 503 74LS122
IC505 78L12
IC504 7662
IC506 7805
J501
TH500
TH501
J502 SEE PROGRAMMING DETAILS
R500 10K
R501 10K
R502 2K2
R503 2K2
R504 2K2
R505 10K
R506 10K
R518 10 K
C503 1µF
C504 22µF
C505 2N2
C506 1µF
C507 22µF
C508 4700µF
C509 1u
C510 1µF
C500 1µF
C501 1µF
C502 1µF
D500
D501
D502
D503
OC500
OC501
OC502
ENL
ENM
DWN
ADJ
UP
2Y
2Z
1Y
1Z
Z
Y
+5V
GND
* J502 SEE PROGRAMMING DETAILS
** Low level converter 26v ref. SDC 19204-302
** High level converter 110v ref. SDC 19206-302
THIS DRAWING AND THE IDEAS AND THE DESIGN INCORPORATED HEREIN, IS THE PROPERTY OF SCANDINAVIAN MICRO SYSTEMS A/S, AND IS NOT TO BE USED IN WHOLE OR IN PART FOR ANY OTHER PROJECT OR SHOWN TO A THIRD PARTY WITHOUT OUR WRITTEN AUTHORIZATION
SCANDINAVIAN MICRO SYSTEMS A/S
P.O.BOX 155, N-1411 KOLBOTN, NORWAY
CUSTOMER / PROJECT
Lehmkuhl Repeater
TITLE
DIGITAL GYRO REPEATER LR60 B
INTERFACE PCB
CIRCUIT DIAGRAM
DRAWING NO.
LS 3600

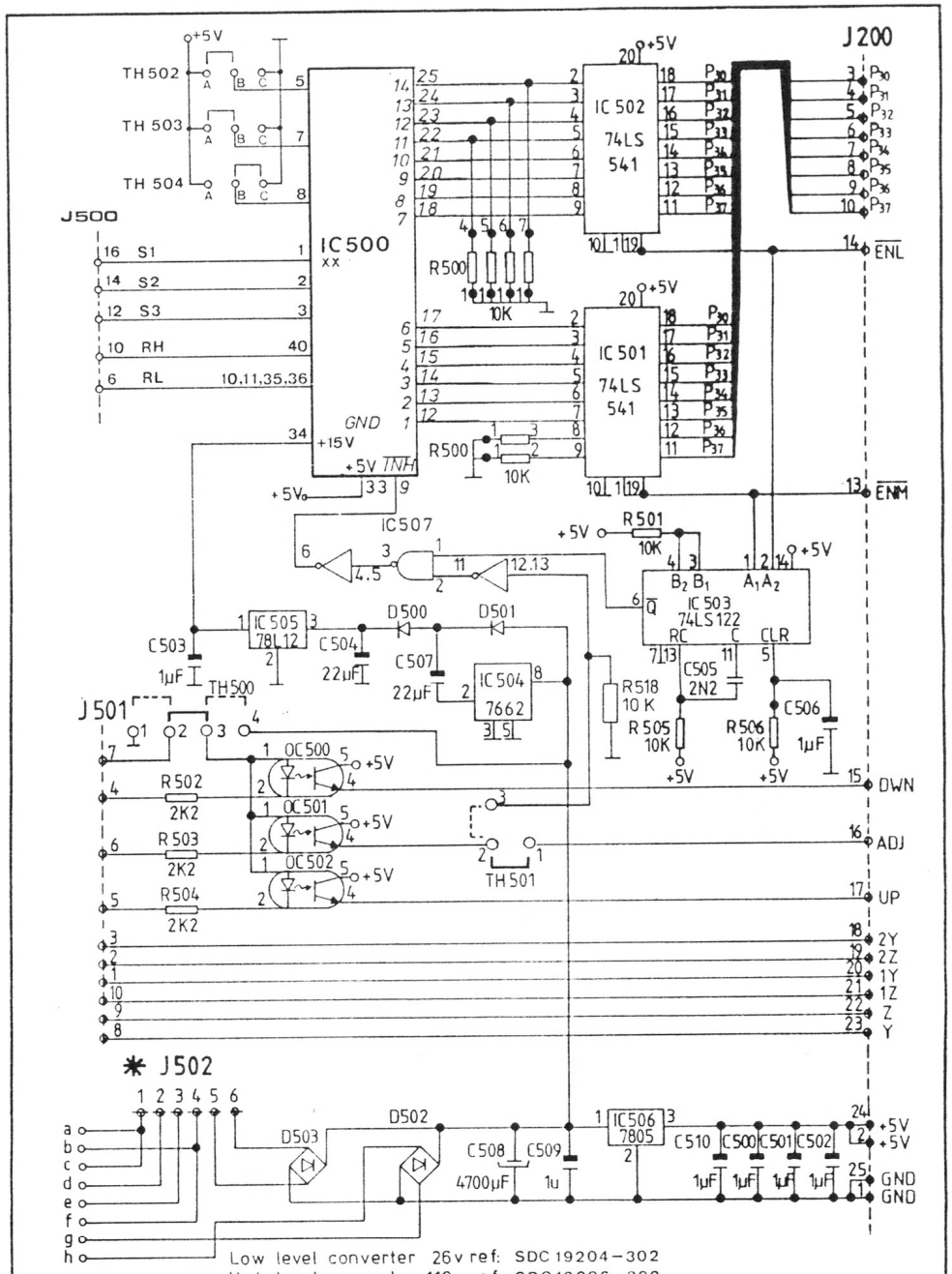
J500
J200
TH502
TH503
TH504
IC500 xx
IC 502 74LS 541
IC 501 74LS 541
IC507
IC 503 74LS122
IC505 78L12
IC504 7662
IC506 7805
J501
TH500
TH501
* J502
R500 10K
R501 10K
R502 2K2
R503 2K2
R504 2K2
R505 10K
R506 10K
R518 10 K
C503 1µF
C504 22µF
C505 2N2
C506 1µF
C507 22µF
C508 4700µF
C509 1u
C510 1µF
C500 1µF
C501 1µF
C502 1µF
D500
D501
D502
D503
OC500
OC501
OC502
ENL
ENM
DWN
ADJ
UP
2Y
2Z
1Y
1Z
Z
Y
+5V
GND
Low level converter 26v ref: SDC 19204-302
xx High level converter 110v ref: SDC 19206-302
* See programming details.
THIS DRAWING AND THE IDEAS AND THE DESIGN INCORPORATED HEREIN, IS THE PROPERTY OF SCANDINAVIAN MICRO SYSTEMS A/S, AND IS NOT TO BE USED IN WHOLE OR IN PART FOR ANY OTHER PROJECT OR SHOWN TO A THIRD PARTY WITHOUT OUR WRITTEN AUTHORIZATION
SCANDINAVIAN MICRO SYSTEMS A/S
P.O.BOX 155, N-1411 KOLBOTN, NORWAY
CUSTOMER / PROJECT
Gyro Repeaters
ScanRepeater
TITLE
Digital Gyro Repeater LR60C
Interface PCB
Circuit diagram
DRAWING NO.
SR 3003

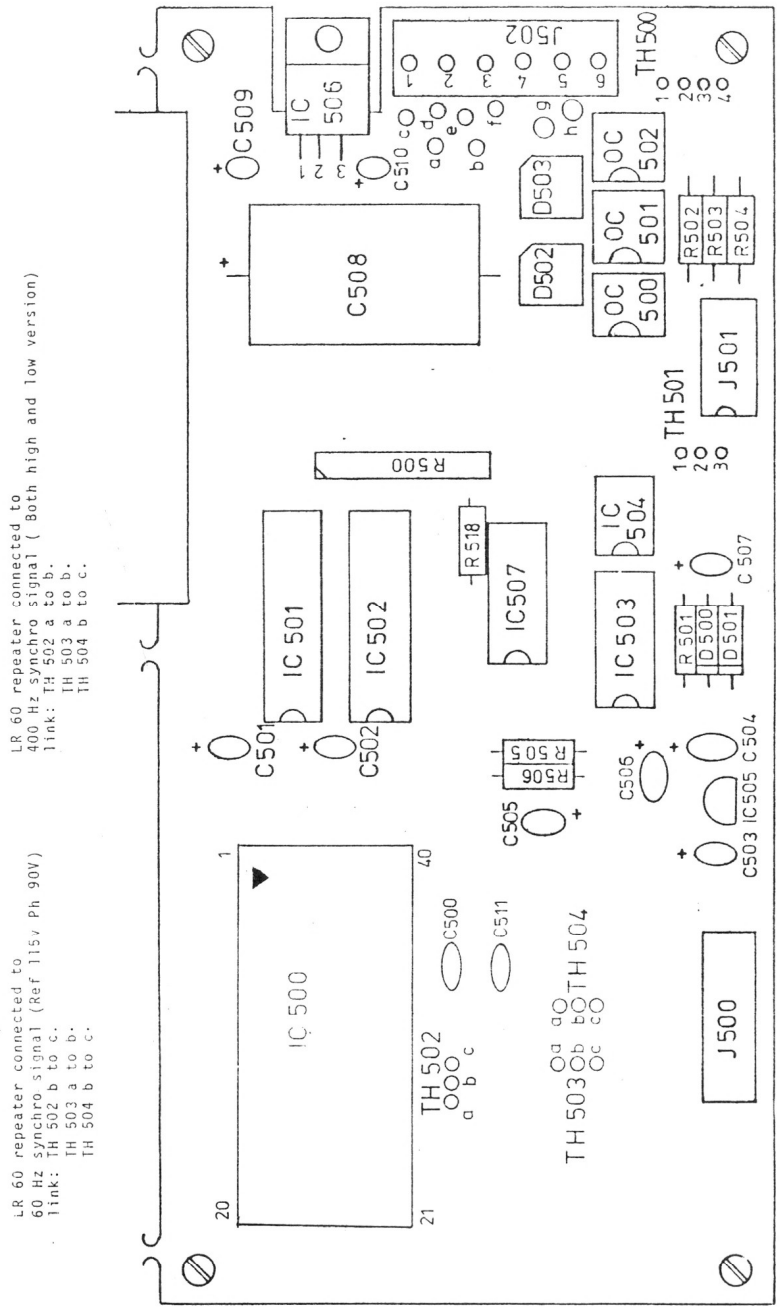

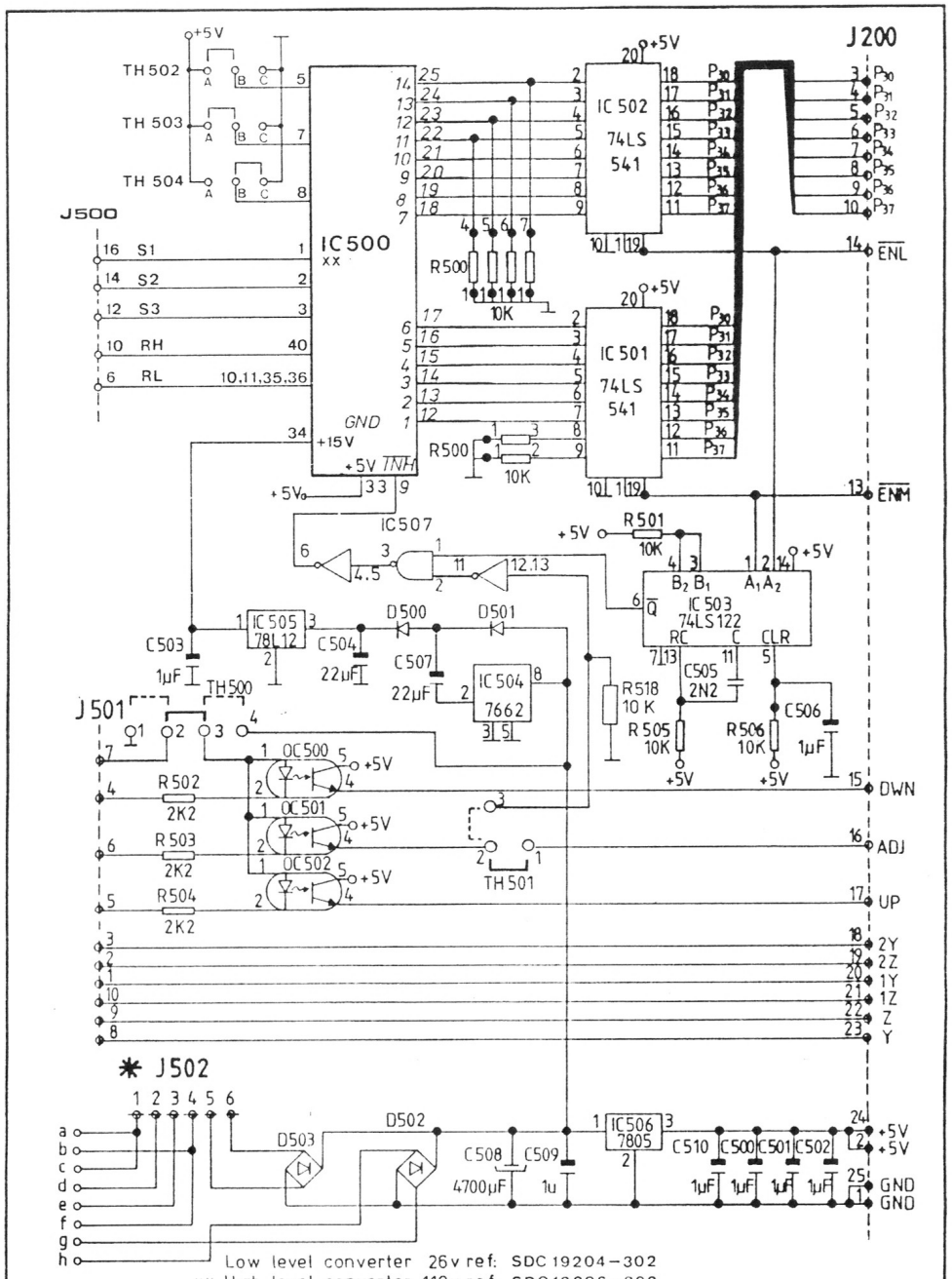

THIS DRAWING AND THE IDEAS AND THE DESIGN INCORPORATED HEREIN IS THE PROPERTY OF SCANDINAVIAN MICRO SYSTEMS A/S, AND IS NOT TO BE USED IN WHOLE OR IN PART FOR ANY OTHER PROJECT OR SHOWN TO A THIRD PARTY WITHOUT OUR WRITTEN AUTHORIZATION

CUSTOMER / PROJECT: Gyro Repeaters **ScanRepeater**

SCANDINAVIAN MICRO SYSTEMS A/S
P.O.BOX 155, N-1411 KOLBOTN, NORWAY

TITLE: DIGITAL GYRO REPEATER LR 60B/C INTERFACE PCB COMPONENT LOCATION

DRWN BY: AOI DATE: 11/5/89 SCALE: CHKD BY: DATE: APPRVD BY: DATE: REF DRAWING: FILE NAME: DRAWING NO. SR 3002

* See programming details.

THIS DRAWING AND THE IDEAS AND THE DESIGN INCORPORATED HEREIN IS THE PROPERTY OF SCANDINAVIAN MICRO SYSTEMS A/S, AND IS NOT TO BE USED IN WHOLE OR IN PART FOR ANY OTHER PROJECT OR SHOWN TO A THIRD PARTY WITHOUT OUR WRITTEN AUTHORIZATION

CUSTOMER / PROJECT: Gyro Repeaters **ScanRepeater**

SCANDINAVIAN MICRO SYSTEMS A/S
P.O.BOX 155, N-1411 KOLBOTN, NORWAY

TITLE: Digital Gyro Repeater LR60C Interface PCB Circuit diagram

DRWN BY: DATE: 09/06/89 SCALE: CHKD BY: DATE: APPRVD BY: DATE: REF DRAWING: FILE NAME: DRAWING NO. SR 3003

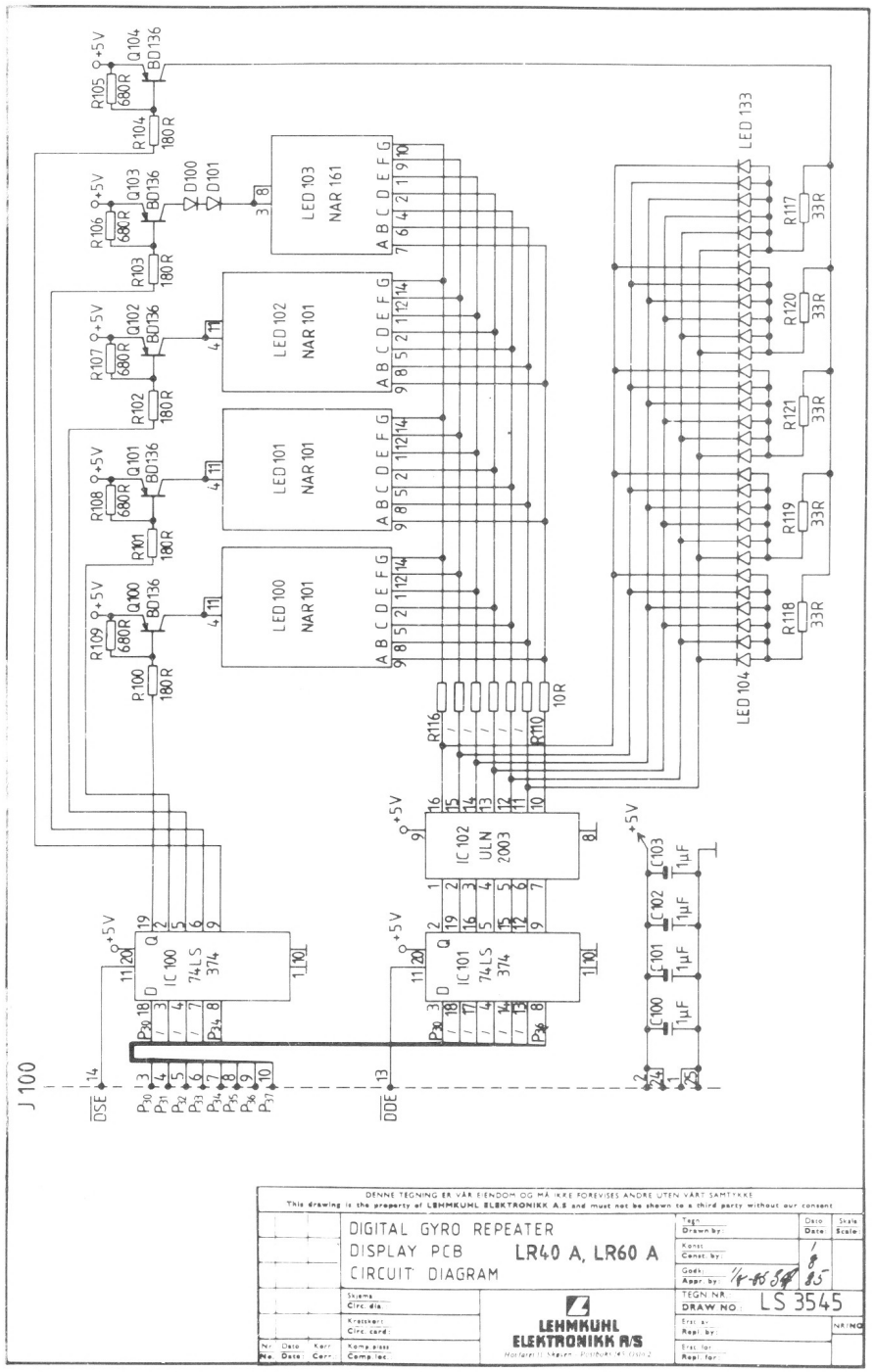
DENNE TEGNING ER VÅR EIENDOM OG MÅ IKKE FOREVISES ANDRE UTEN VÅRT SAMTYKKE
This drawing is the property of LEHMKUHL ELEKTRONIKK A.S and must not be shown to a third party without our consent
DIGITAL GYRO REPEATER
DISPLAY PCB
CIRCUIT DIAGRAM
LR40 A, LR60 A
LEHMKUHL ELEKTRONIKK A/S
TEGN NR.
DRAW NO.
LS 3545
LED 103 NAR 161
LED 102 NAR 101
LED 101 NAR 101
LED 100 NAR 101
LED 133
LED 104
IC 102 ULN 2003
IC 100 74LS 374
IC 101 74LS 374
J 100
DSE
DDE

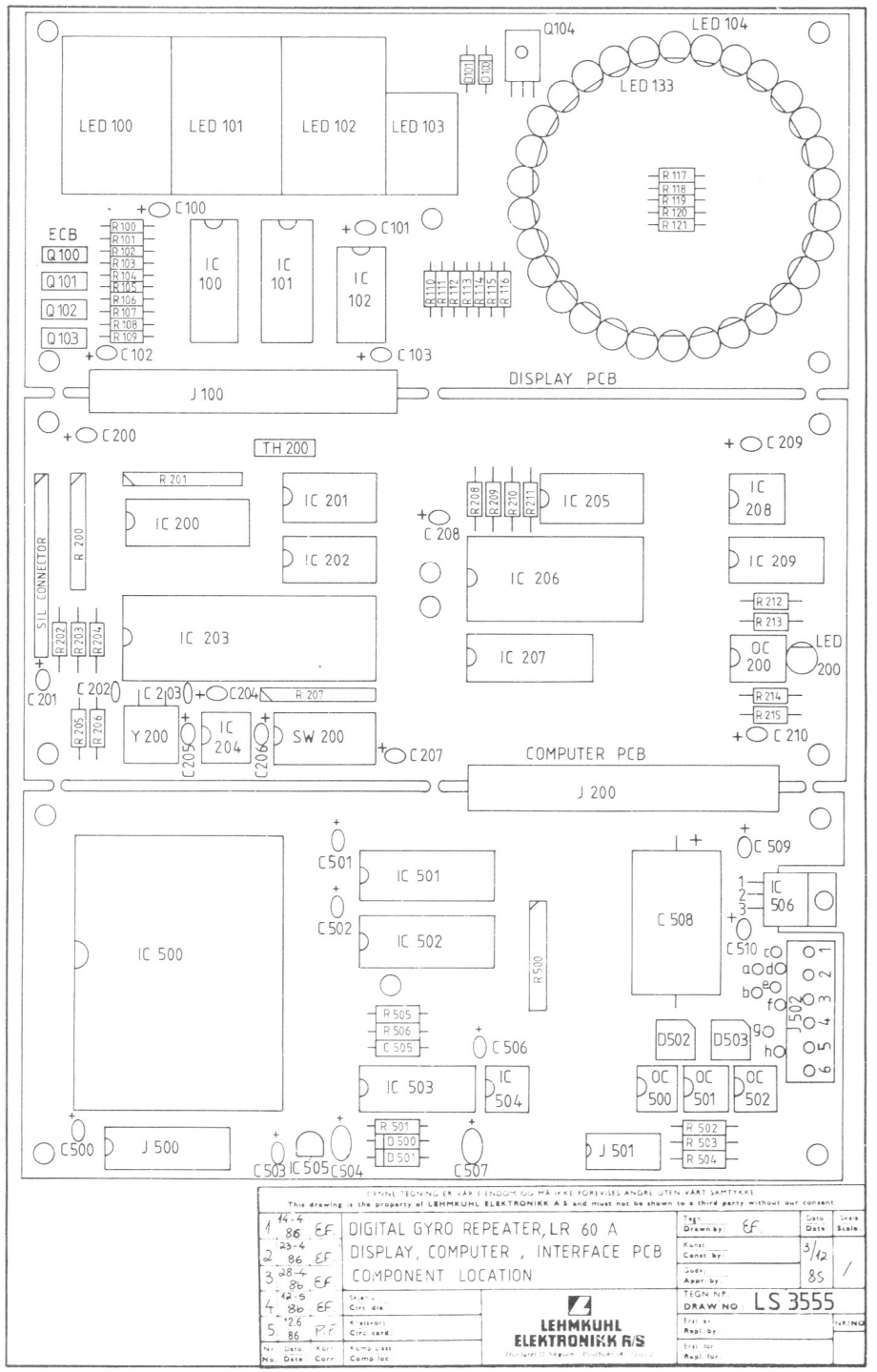
DENNE TEGNING ER VÅR EIENDOM OG MÅ IKKE FOREVISES ANDRE UTEN VÅRT SAMTYKKE
This drawing is the property of LEHMKUHL ELEKTRONIKK A.S and must not be shown to a third party without our consent
DIGITAL GYRO REPEATER, LR 60 A
DISPLAY, COMPUTER, INTERFACE PCB
COMPONENT LOCATION
LEHMKUHL ELEKTRONIKK A/S
TEGN NR.
DRAW NO.
LS 3555
LED 100
LED 101
LED 102
LED 103
LED 104
LED 133
ECB
DISPLAY PCB
J 100
TH 200
SIL CONNECTOR
COMPUTER PCB
J 200
IC 200
IC 201
IC 202
IC 203
IC 204
IC 205
IC 206
IC 207
IC 208
IC 209
IC 500
IC 501
IC 502
IC 503
IC 504
IC 506
Y 200
SW 200
J 500
J 501
J 502

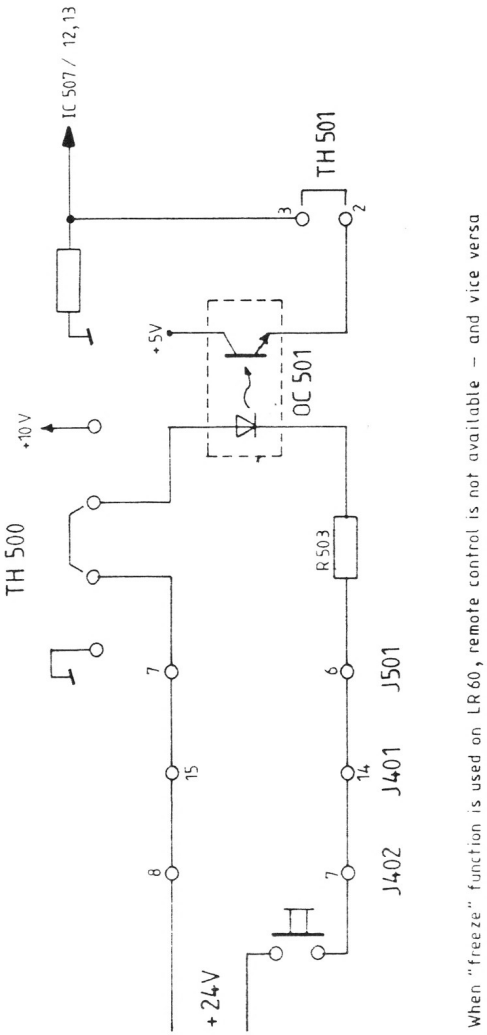

When "freeze" function is used on LR60, remote control is not available – and vice versa

THIS DRAWING, AND THE IDEAS AND THE DESIGN INCORPORATED HEREIN, IS THE PROPERTY OF SCANDINAVIAN MICRO SYSTEMS A/S, AND IS NOT TO BE USED IN WHOLE OR IN PART FOR ANY OTHER PROJECT OR SHOWN TO A THIRD PARTY WITHOUT OUR WRITTEN AUTHORIZATION	SCANDINAVIAN MICRO SYSTEMS A/S P.O.BOX 155, N-1411 KOLBOTN, NORWAY	
CUSTOMER / PROJECT Lehmkuhl Repeater	TITLE DIGITAL GYRO REPEATER LR60 B FREEZE FUNCTION W/ EXTERNAL 24V SUPPLY CIRCUIT DIAGRAM	
DRWN BY DATE Rev. No. DATE	SCALE APPRVD BY DATE	REF DRAWING FILE NAME
		DRAWING NO. LS-4347

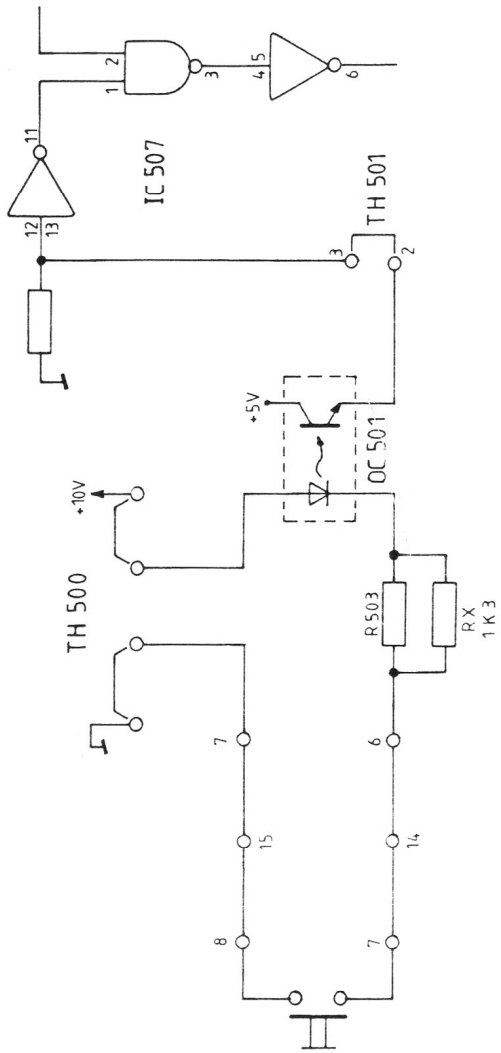

When "freeze" function is used on LR60, remote control is not available – and vice versa

THIS DRAWING, AND THE IDEAS AND THE DESIGN INCORPORATED HEREIN, IS THE PROPERTY OF SCANDINAVIAN MICRO SYSTEMS A/S, AND IS NOT TO BE USED IN WHOLE OR IN PART FOR ANY OTHER PROJECT OR SHOWN TO A THIRD PARTY WITHOUT OUR WRITTEN AUTHORIZATION	SCANDINAVIAN MICRO SYSTEMS A/S P.O.BOX 155, N-1411 KOLBOTN, NORWAY	
CUSTOMER / PROJECT Lehmkuhl Repeater	TITLE DIGITAL GYRO REPEATER LR 60 B FREEZE FUNCTION W/ INTERNAL 10V SUPPLY CIRCUIT DIAGRAM	
DRWN BY DATE Rev. No. DATE	SCALE APPRVD BY DATE	REF DRAWING FILE NAME
		DRAWING NO. LS-4348

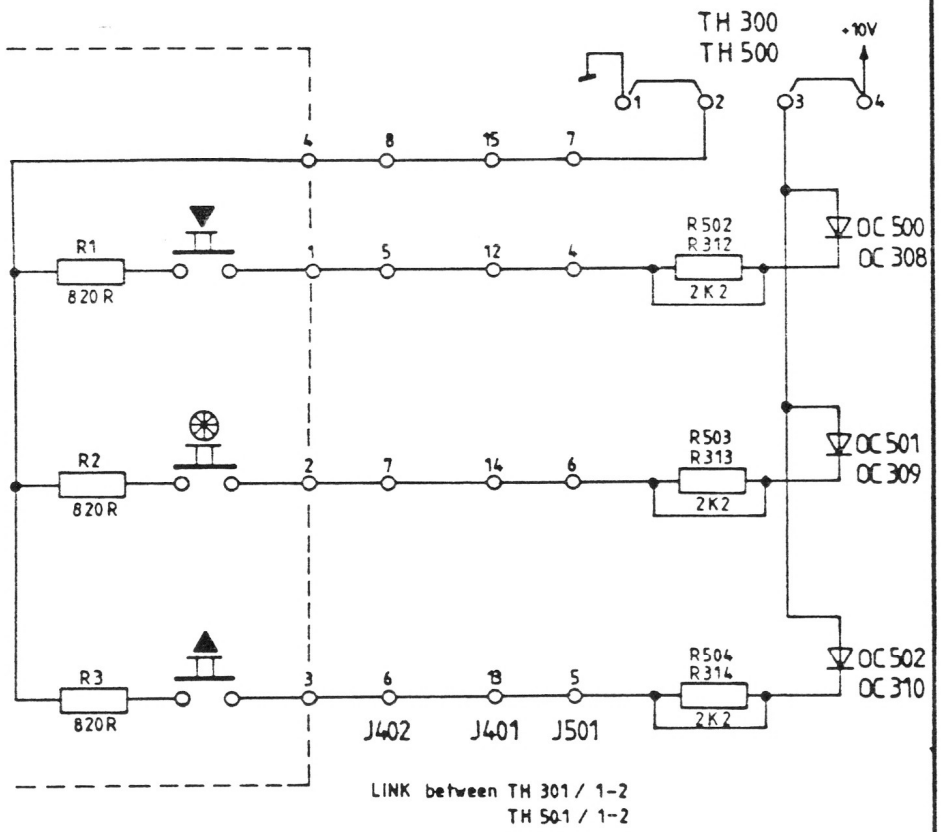

When remote control is used on LR60, "freeze" function is not available – and vice versa

THIS DRAWING, AND THE IDEAS AND THE DESIGN INCORPORATED HEREIN, IS THE PROPERTY OF SCANDINAVIAN MICRO SYSTEMS A/S, AND IS NOT TO BE USED IN WHOLE OR IN PART FOR ANY OTHER PROJECT OR SHOWN TO A THIRD PARTY WITHOUT OUR WRITTEN AUTHORIZATION	SCANDINAVIAN MICRO SYSTEMS A/S P.O.BOX 155, N-1411 KOLBOTN, NORWAY	
CUSTOMER / PROJECT Lehmkuhl Repeater	TITLE DIGITAL GYRO REPEATER LR40B, C or LR60B REMOTE CONTROL WITH INTERNAL SUPPLY CIRCUIT DIAGRAM	
DRWN BY DATE Rev. No. DATE	SCALE APPRVD BY DATE	REF DRAWING FILE NAME
		DRAWING NO. LS-4346

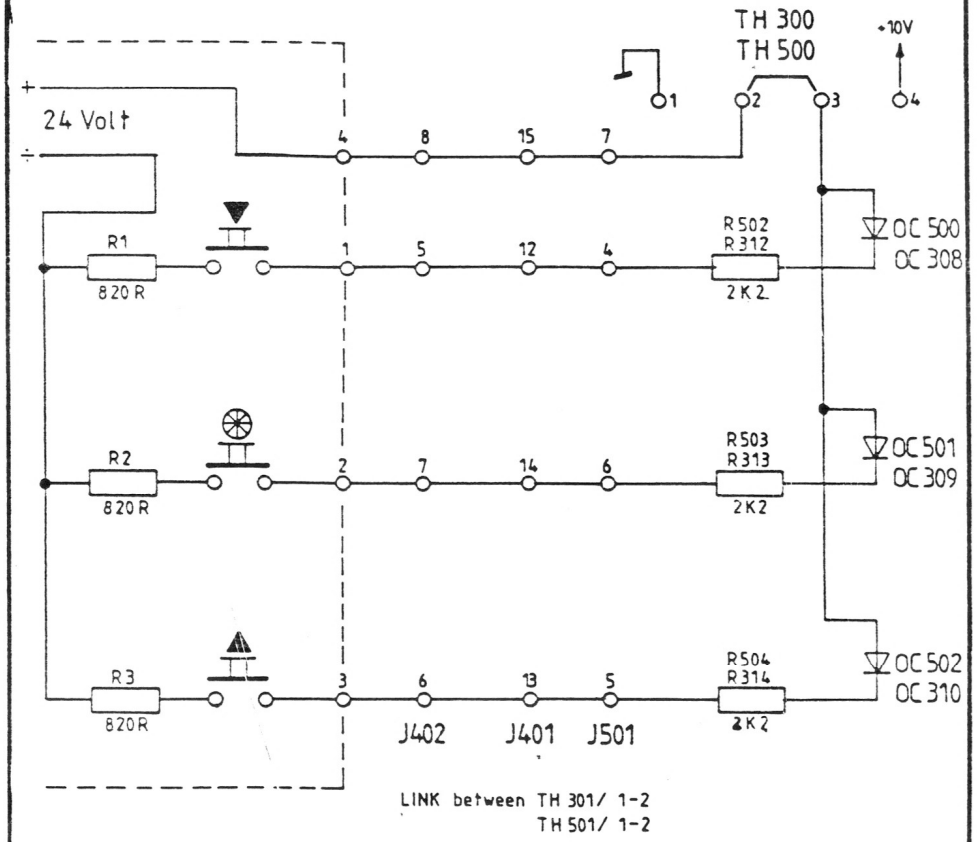

When remote control is used on LR60, "freeze" function is not available – and vice versa

THIS DRAWING, AND THE IDEAS AND THE DESIGN INCORPORATED HEREIN, IS THE PROPERTY OF SCANDINAVIAN MICRO SYSTEMS A/S, AND IS NOT TO BE USED IN WHOLE OR IN PART FOR ANY OTHER PROJECT OR SHOWN TO A THIRD PARTY WITHOUT OUR WRITTEN AUTHORIZATION	SCANDINAVIAN MICRO SYSTEMS A/S P.O.BOX 155, N-1411 KOLBOTN, NORWAY	
CUSTOMER / PROJECT Lehmkuhl Repeater	TITLE DIGITAL GYRO REPEATER LR40B, C or LR60B REMOTE CONTROL WITH EXT.24V SUPPLY CIRCUIT DIAGRAM	
DRWN BY DATE Rev. No. DATE	SCALE APPRVD BY DATE	REF DRAWING FILE NAME
		DRAWING NO. LS-4345

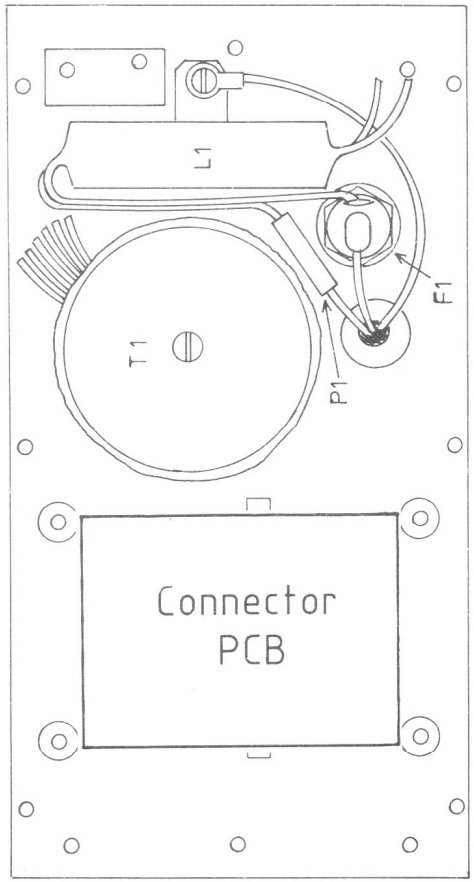

DENNE TEGNING ER VÅR EIENDOM OG MÅ IKKE FOREVISES ANDRE UTEN VÅRT SAMTYKKE
This drawing is the property of LEHMKUHL ELEKTRONIKK A.S and must not be shown to a third party without our consent

1	22-4 86	EF	DIGITAL GYRO REPEATER LR40 A, LR60 A	Tegn. Drawn by: 3/9 84	Dato Date	Skala Scale
			CONNECTOR PCB AND POWER UNIT	Konst. Const. by		
			COMPONENT LOCATION	Godk. Appr. by		
			Skjema Circ. dia.	TEGN. NR. DRAW NO. LS 4294		
			Kretskort Circ. card	Erst. av Repl. by		NO
Nr. No.	Dato Date	Korr. Corr.	Komp.pass Comp. loc.	Erst. for Repl. for		

LEHMKUHL ELEKTRONIKK A/S
Hovfaret 11, Skøyen - Postboks 145, Oslo 2

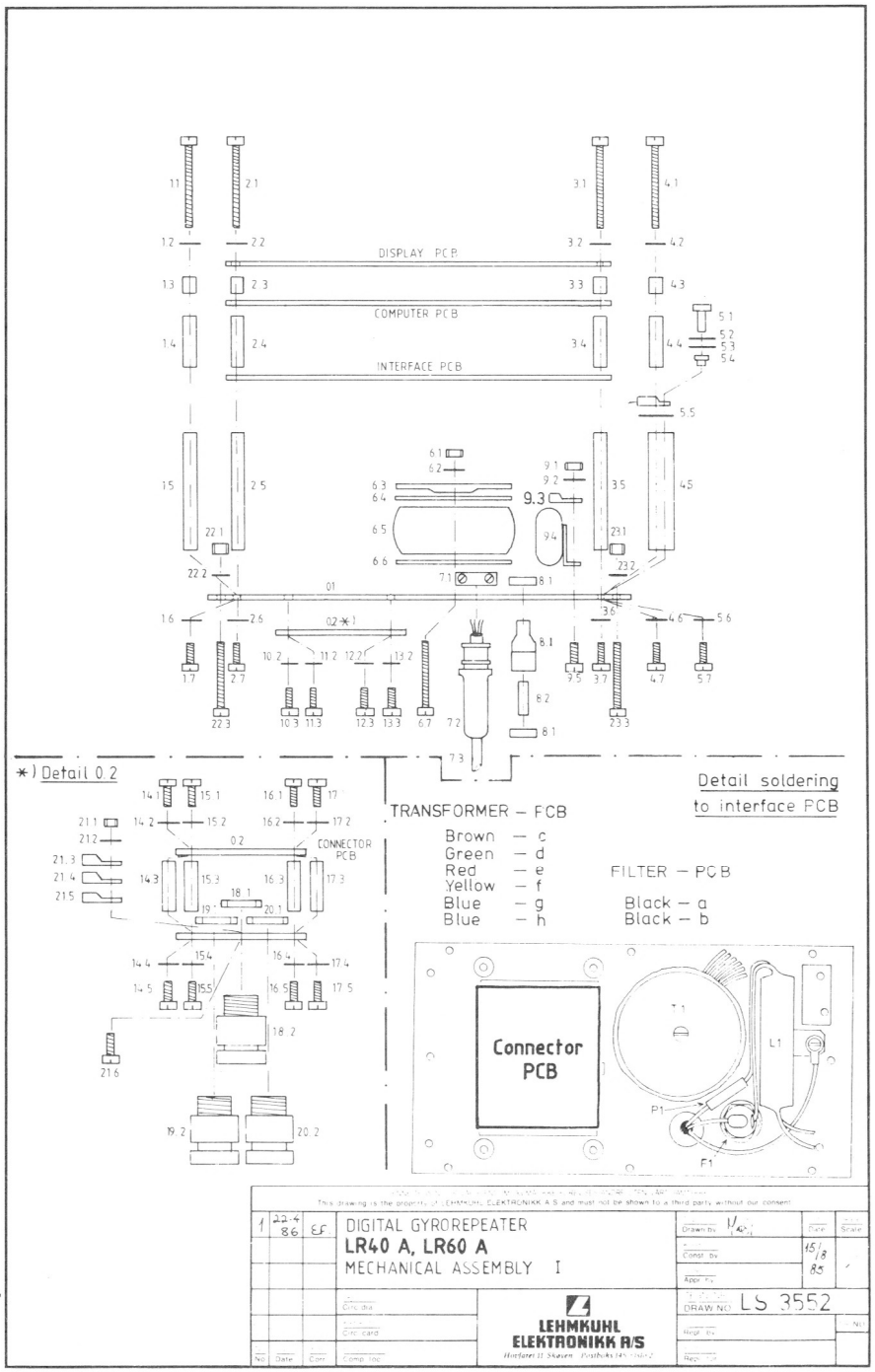
DISPLAY PCB
COMPUTER PCB
INTERFACE PCB
*) Detail 0.2
CONNECTOR PCB
TRANSFORMER – PCB
Brown – c
Green – d
Red – e
Yellow – f
Blue – g
Blue – h
FILTER – PCB
Black – a
Black – b
Detail soldering to interface PCB
Connector PCB
T1
L1
P1
F1
This drawing is the property of LEHMKUHL ELEKTRONIKK A.S and must not be shown to a third party without our consent
1 22-4 86 EF
DIGITAL GYROREPEATER
LR40 A, LR60 A
MECHANICAL ASSEMBLY I
Drawn by
Const. by
Appr. by
15/8 85
Circ. dia
Circ. card
Comp. loc
DRAW NO LS 3552
LEHMKUHL ELEKTRONIKK A/S
Hoffaret 11, Skøyen – Postboks 145, Oslo 2
Repl. by
Repl. for

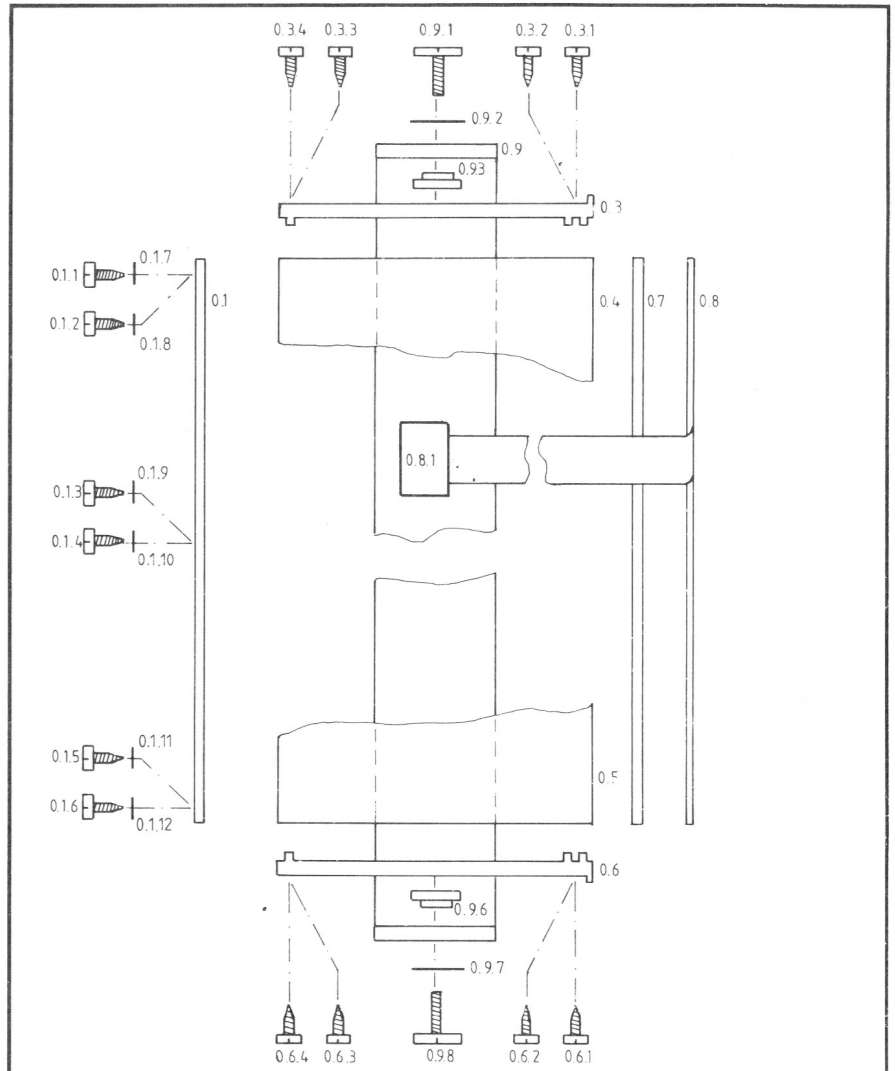
0.3.4 0.3.3 0.9.1 0.3.2 0.3.1
0.9.2
0.9
0.9.3
0.3
0.1.1 0.1.7
0.1.2 0.1.8
0.1
0.4
0.7
0.8
0.8.1
0.1.3 0.1.9
0.1.4 0.1.10
0.1.5 0.1.11
0.1.6 0.1.12
0.5
0.6
0.9.6
0.9.7
0.6.4 0.6.3 0.9.8 0.6.2 0.6.1
This drawing is the property of LEHMKUHL ELEKTRONIKK A.S and must not be shown to a third party without our consent
1 22-4 86 EF
DIGITAL GYROREPEATER
LR40 A, LR60 A
MECHANICAL ASSEMBLY II
Drawn by Kaji
Const. by
Appr. by
16/8 85
Circ. dia
Circ. card
Comp. loc
DRAW NO LS 4203
LEHMKUHL ELEKTRONIKK A/S
Hoffaret 11, Skøyen – Postboks 145, Oslo 2
Repl. by
Repl. for

CHAPTER FIVE

TROUBLE SHOOTING

ALARM FUNCTIONS

5.1.1. The Lehmkuhl Digital Gyro Repeater is continuously checking its system functions. Any system fault will cause an alarm state indicated by the display flashing ON and OFF at approx. one cycle per sec.

5.1.2. By using the Status Test (see Chapter 2) while the display is still flashing the cause of an alarm can be determined by reading the displayed codes. See 5.8.1 and 5.8.2.

An alarm is canceled by adjusting the Heading Display, but the alarm will reappear as long as the fault is not repaired.

POWER-ON/RESET ALARM

5.2.1. When power is turned on after a power break, or when the system is reset using the keyboard Reset function (pressing all 3 buttons simultaneously), the heading is set to 000.0 degrees and the display will start flashing.

LOW-VOLTAGE ALARM

5.3.1. If the supply voltage drops below a preset limit, the display will turn dark. When the voltage is restored the heading will be reset to 000.0 and the display starts flashing.

MISSING GYRO SIGNAL (LR40A only)

5.4.1. The gyro transmission input of SI, S2, and S3 is checked for signals missing or short circuit. When connected to a synchro type system the reference signal will also be checked. Any errors will cause the display to start flashing. The heading will not change.

MISSING SERIAL INPUT

5.5.1. When connected as a Slave Repeater, no incoming serial signal will cause alarm. The heading will not change, but the display will start flashing.

ALARM IN MASTER

5.6.1. When connected as a Slave Repeater, an alarm condition in the Master Repeater will be transmitted to the Slave Repeater(s) and set the alarm in the Slave Repeater(s) also. The heading is not changed.

SOFTWARE DECODING ALARMS

5.7.1. Unrecognized gyro transmission signal codes and UP/DOWN changes in the decoding procedure which exceed 1/6 of a degree will start flashing the display, but will NOT change the heading information.

KEY TO ALARM CODES

LR40A and LR60A as Master Repeaters.

5.8.1.
- 040.0: Internal fault - software error.
- 080.0: Erratic signals from gyro (LR40A only).
- 400.0: Signals from gyro missing or open/short circuited signal transmission link, or fault in repeater interface circuit (LR40A only).
- 800.0: Low power or sporadic powerbreak.

LR40A and LR60A as Slave Repeater

5.8.2.
- 020.0: Incorrect signals from master repeater.
- 040.0: Internal fault - software error.
- 100.0: Alarm in master repeater.
- 200.0: Signals from master repeater missing, or open/short circuited signal transmission link.
- 800.0: Low power or sporadic power break.

CHAPTER SIX

LAY-OUT, DIAGRAMS, AND COMPONENTS LIST

Draw. no.	LS 4191,	Connector PCB and Mains Interface LR60A
"	LS 4294,	Connector PCB and Mains Interface LR40A
"	LS 4203,	Mech.Assembly I
"	LS 3552,	Mech.Assembly II
"	LS 4190,	Connector PCB and Power Wiring Diagram LR60A
"	LS 4293,	Connector PCB and Power Wiring Diagram LR40A
"	LS 3547,	LR40A Interface PCB Circuit Diagram
"	LS 3546,	Computer PCB Circuit Diagram
"	LS 3545,	Display PCB Circuit Diagram
"	LS 3548,	LR40A, Lay-out PCB Components
"	LS 3554,	LR60A, Interface PCB Circuit Diagram
"	LS 3555,	LR60A, Lay-out PCB Components

PART LIST DGR LR40A
REV. 04.06.86

FIND NO.	QTY.	PART NO.	DESCRIPTION	
12	1	LS3559	DISPLAY PCB LS3559	100 NUMBERS
13	1	LS3560	COMPUTER PCB LS3560	200 NUMBERS
14	1	LS3561	INTERFACE PCB LS3461	300 NUMBERS
15	1	LS4290	CONNECTOR PCB LS4290	400 NUMBERS
18	1	417500	IC ULN2003	IC102
19	1	115015	IC TMN2732D/2764 PREPROGRAMMED	IC206
20	1	417501	IC HD 64A03RP	IC203
21	1	111012	IC 74LS12N	IC201
22	1	111014	IC 74LS14N	IC209
23	1	111027	IC 74LS27N	IC202
25	3	111374	IC 74LS374	IC100,101,207
26	2	111254	IC 74LS541N	IC200,300
27	1	417502	IC74ALS138N	IC205
29	1	417503	IC TL7705A	IC204
30	1	114010	IC LM7805T	IC301
32	1	417504	IC uA9638	IC208
33	11	116027	OC 4N33/PS2022	OC300-310
34	1	116006	OC 6NL38	OC200
36	1	417505	IC SOCKET 28-PIN DIL ICA 383-SG	IC206
37	1	417506	HEADSTIKKER 4-PIN SIL	
		417507	1/9 PART OF AW134/21,1/636 / ASSMANN	TH200
38		417508	HEADSTICKER 2-PIN 1/9 PART OF 75188-806-18 BERG	TH400,401,402
39	1	417509	XTAL 4,9152 MHz	Y200
40	1		TAPE	
41	5	417510	TRANSISTOR BD136	Q100-104
43	8	122002	DIODE RECTIFIER IN4002	D100,101,303,307,311, 403,404,405
44	2	126000	DIODE RECTIFIER SKB1,2/0,8/SEMICRON	D314,315
45	6	417511	DIODE ZENER 4,3V 1,3W IN4731A / RD4,3FB	D301,302,305,306,309, 310
46	6	417512	DIODE ZENER 24V 1,3W 1N4749A / RD24FB	D300,304,308,400,401, 402
47	2	417513	DIODE ZENER 33V 1,3W IN4752A / RD33FB	D312,313
48	31	405867	DIODE LED RED HLMP3300 / HP	LED 104-133,200
49	3	417514	DIODE LED 7-SEG NAR101 / STANLY	LED100-102
50	1	417515	DIODE LED 7-SEG NAR161 / STANLY	LED103
51	7	140060	RESISTOR 10R 1/4W,5% / MR25	R110-116
52	5	141105	RESISTOR 33R 1/4W,5% / MR25	R117-121
53	5	141140	RESISTOR 100R 1/4W,5% /MR25	R100-104
54	2	141170	RESISTOR 240R 1/4W,5% / MR25	R214,215
55	5	141205	RESISTOR 680R 1/4W,5% / MR25	R105-109
56	10	141220	RESISTOR 1KO 1/4W,5% / MR25	R202-206,208-212
57	3	141240	RESISTOR 2K2 1/4W,5% / MR25	R312-R314
59	1	141330	RESISTOR 22K 1/4W,5% / MR25	R213
60	1	417516	RESISTOR 390R 3W,5% / CW2B-13	R300,302,304
61	7	417517	RESISTOR 1K5 3W,5% / CW2B-13	R301,303,305-309
62	2	417518	RESISTOR SIL 1KO 9-PIN,8-RESISTORS	R200,207
63	2	145745	RESISTOR SIL 10K 9-PIN,8-RESISTORS	R201,311
64	1	145755	RESISTOR SIL 1M 9-PIN,8-RESISTORS	R310
65	5	128004	INDUCTOR 1 MH B78108-S1105 / SIEMENS	L300-304
66	3	417519	LINK CONTACT AKSP-5.08	LK401,402,403
75	2	332100	CAPASITOR CERAMIC 16PF 2222-680-58159	C202,203
76	8	130040	CAPASITOR CERAMIC 470 PF 2222-680-70471	C305-312
78	5	417520	CAPASITOR Y-TYPE 0,01uF PME271Y510 / RIFA	C300-304
79	1	133000	CAPASITOR TANTAL 0,1uF/35V	C205
80	12	133070	CAPASITOR TANTAL 1uF /35V	C100-103,200,201,207-210, 314,315
82	2	134050	CAPASITOR TANTAL 4u7 /35V	C204,C206
84	1	417521	CAPASITOR El.LYT 4700uF/16V MAX L=30mm SILICON	C313
86	2	417522	FUSE SOCKET ¼ 781-01 751.0042	F300
87	1	417523	DIL SWITCH 6-POS 24006 GS / EECO	SW300
88	1	417524	DIL SWITCH 8-POS 24008 GS / EECO	SW200
89	1	417525	CONNECTOR HEADER AWH26G0122 / ASSMANN	P401
90	1	417526	CONNECTOR AWP26-7150 / ASSMANN	J401
91	1	417527	CONNECTOR AWLP-10 / ASSMANN	J308
92	1	417528	CONNECTOR AWLP-16 / ASSMANN	J305
93	1	LS4192	CABLE,RIBBON 26 LEADS L=30cm 55-26-28-10G	J305,308
94	3	417529	SCREWTERMINAL 2-POS 952 SGDS / WECO	J304,306,307
95	4	417530	SCREWTERMINAL 3-POS 953 SGDS / WECO	J300-303
96	1	417531	SCREWTERMINAL 6-POS 956 SGDS / WECO	J309
97	1	417532	SCREWTERMINAL 8-POS 970 DS / WECO	J400
98	1	417533	SCREWTERMINAL 10-POS 970 DS / WECO	J402
99	2	417534	FLEXISTRIP FSN-21A-25 / T&B	J100,200
100	2	LS3533	SIDE-PANEL S63600/SAPA 96mm	0.3,0.6
101	2	LS3536	TOP&BOTTOM PANEL S63601/SAPA 180mm	0.4,0.5
102	1	LS3534	REAR COVER	0.1
103	1	LS4180	TERMINAL-ASSEMBLY	0.2
104	1	LS3535	CRADLE	0.9
105	2	LS4181	BRACKET FOR PANEL MOUNTING	PANEL MOUNT KIT
106	1	LS4182	HEATSINK	4.5
107	1	417535	NYLON SHOULDER WASHER M3/TO220	5.4
108	1	417536	MICA INSULATOR FOR TO220	5.5
109	1	151150	LINE FILTER F11,037 / STAUBO	L1/9.4
110	1	417537	TRANSFORMER 7564-P2S1 / TAHONIC	T1/6.3,6.4,6.5,6.6
111	1	151000	FUSE SOCKET FOR CHASSIS 031-1081 / FEIRING	8.1
112	3	417538	FUSE 50 mA SLOW 5*20	F300,SPARE PART KIT
113	3	417539	FUSE 100mA SLOW 5*20	8.2,SPARE PART KIT
114	2	417540	FUSE 200mA SLOW 5*20	SPARE PART KIT
115	2	417541	FUSE 1A SLOW 5*20	SPARE PART KIT
116	1	417542	FRONT-FOLIE W/BUTTONS / ISOF	0.8
117	1	417543	CONNECTOR,CLINCHER 65801-004 / BERG	0.8.1
118	1	LS4250	FILTER ACRYLIC 461D VIOLETT P-50	0.7
119	1	417544	GROMMET 134-001/HENACO	7.2
120	1	417545	CLAMPING 684-054 / HENACO	7.1
121	1	417546	MAINS CABLE "M PMH 2* 0,75+EARTH	7.3
122	1	417547	PG 11, MAKROLON	18.2
123	1	417548	NUT PG11, BRASS	18.1
124	1	417549	BLINDING PG11, MAKROLON	SPARE PART KIT
125	2	417550	PG9, MAKROLON	19.2,20.2
126	2	417551	NUT PG9, BRASS	19.1,20.1
127	2	417552	BLINDING PG9, MAKROLON	SPARE PART KIT
128	2	LS4212	KNURLED NUT FOR PANEL MOUNTING	PANEL MOUNT KIT
129	2	LS4213	SCREW FOR CRADLE	0.9.1,0.9.8
130	2	LS4214	FRICTION WASHER	0.9.3,0.9.6
131	4	417553	SPACER M3*8mm ENLIS 2*8 / ELRA	1.3,2.3,3.3,4.3
132	4	417554	SPACER M3*25mm ENLIS 2*25 / ELRA	1.4,2.4,3.4,4.4
133	4	417555	SPACER M3*25mm ENHET 2*25 / ELRA	14.3,15.3,16.3,17.3
134	3	417556	SPACER M3*50mm ENHET 2*50 / ELRA	1.5,2.5,3.5
135	1	417557	SHRINK CONNECTOR A1525SK	P1
136	4	417558	SOLDER TAG 03411.311.011/HELLANOR	9.3,21.3,21.4,21.5
137	18		SCREW CH/HD M3*8, NS1087-4,8-EL.SINK	1.7,2.7,3.7,4.7,5.1,5.7, 10.3,11.3,12.3,13.3,14.1, 14.5,15.1, 15.5,16.1,16.5,17.1,17.5
139	2		SCREW CH/HD M3*25,NS1087-4,8-EL.SINK	22.3,23.3
140	4		SCREW CH/HD M3*45, NS1087-4,8 EL.SINK	1.1,2.1,3.1,4.1
141	1		SCREW CH/HD M4*15,NS1087-4,8-EL.SINK	21.6
142	1		SCREW CH/HD M4*35,NS1087-4,8-EL.SINK	6.7
143	1		SCREW CH/HD M4*10,NS1087-4,8-EL.SINK	9.5
153	10		SCREW SELF TAP NO4*½" POZIDRIVE SST	0.3.1-0.3.4,0.6.1-0.6.4 P.M.KIT
154	8		SCREW SELF TAP NO4*1/4" TYPE Z EL.SINK	0.1.1-0.1.6. P.M.KIT
155	4		SCREW SELF TAP FOR CRADLE NO6*3/4"	SPARE PART KIT
156	2		NUT M3 NS1827-5	22.1,23.1
159	30		WASHER CRINKLE A3,2 DIN 6798EL	1.2,1.6,2.2,2.6,3.2,3.6, 4.2,4.6,5.2,5.6,10.2,11.2, 12.2,13.2,14.2,14.4,15.2, 15.4,16.2,16.4,17.2,17.4, 22.2,23.2,0.1.7,0.1.8, 0.1.9,0.1.10,0.1.11,0.1.12
161	1		WASHER PLAIN M3,2 DIN 433 EL	5.3
162	3		WASHER CRINKLE A4,3 DIN 6798 EL	6.2,9.2,21.2
163	2		WASHER WAVE B5,3 DIN 137	0.9.2,0.9.7
164	2		HANKNUT PF-M4-2	0.9.4,0.9.5
165	4		" ARB-M3-2,0-A	10.1,11.1,12.1,13.1
166	6	LS4256	PROGRAMING WIRE	
167	1	417559	LABEL FOR E-PROM	
169	1	417560	LABEL, SERIAL NUMBER LR40A	
171	1	417561	LABEL, FUSES	
172	1	417562	LABEL, EARTH	
173	2	417563	MONOPLAST CASSETTE	
174	1	417564	PAPERBOX	
175	1	417565	PLASTIC BAG 230x325 mm	
176	1	417567	PLASTIC BAG 110x150 mm	

PART LIST DGR LR60A
REV. 05 06 86

FIND NO.	QTY.	PART NO.	DESCRIPTION	
12	1	LS3559	DISPLAY PCB LS3559	100 NUMBERS
13	1	LS3560	COMPUTER PCB LS3560	200 NUMBERS
15	1	LS4254	CONNECTOR PCB LS4254	400 NUMBERS
16	1	LS3562	INTERFACE PCB LS3562	500 NUMBERS
17	1	406300	IC S/D CONVERTER SDC19120-302/Ref. 26VAC	IC500 (low level)
17	1	406300	IC S/D CONVERTER SDC19121-302/ref.115VAC	IC500 (high level)
18	1	417500	IC ULN2003	IC102
19	1	115015	IC TMM2732D/2764 PREPROGRAMMED	IC206
20	1	417501	IC HD 63A03RP	IC203
21	1	111012	IC 74LS12N	IC201
22	1	111014	IC 74LS14N	IC209
23	1	111027	IC 74LS27N	IC202
24	1	417469	IC74LS122	IC503
25	3	111374	IC 74LS374	IC100,101,207
26	2	111254	IC 74LS541N	IC200,501,502
27	1	417502	IC74ALS138N	IC205
28	1	417469	ICL7662	IC504
29	1	417503	IC TL7705A	IC204
30	1	114010	IC LM7805T	IC506
31	1	417570	IC LM78L12	IC505
32	1	417571	IC uA9638	IC208
33	3	116027	OC 4N33/PS2022	OC500-502
34	1	116006	OC 6N138	OC200
35	2	417572	IC SOCKET 20-PIN SIL AW127-2016	IC500
36	1	417505	IC SOCKET 28-PIN DIL ICA 383-SG	IC206
37	1	417506	HEADSTIKKER 4-PIN SIL	
		417507	1/9 PART OF AW134/21,1/636 / ASSMANN	TH200
39	1	417509	XTAL 4,9152 MHz	Y200
40	1		TAPE	
41	5	417510	TRANSISTOR BD136	Q100-104
42	2	308531	DIODE RECTIFIER BYV 27-50	D500,501
43	2	122002	DIODE RECTIFIER IN4002	D100,101
44	2	126000	DIODE RECTIFIER SKB1,2/0,8/SEMICRON	D502,503
48	31	405867	DIODE LED RED HLMP3300 / HP	LED 104-133,200
49	3	417514	DIODE LED 7-SEG NAR101 / STANLY	LED100-102
50	1	417515	DIODE LED 7-SEG NAR161 / STANLY	LED103
51	7	140060	RESISTOR 10R 1/4W,5% / MR25	R110-116
52	5	141105	RESISTOR 33R 1/4W,5% / MR25	R117-121
53	5	141140	RESISTOR 100R 1/4W,5% /MR25	R100-104
54	2	141170	RESISTOR 240R 1/4W,5% / MR25	R214,215
55	5	141205	RESISTOR 680R 1/4W,5% / MR25	R105-109
56	10	141220	RESISTOR 1KO 1/4W,5% / MR25	R202-206,208-212
57	3	141240	RESISTOR 2K2 1/4W,5% / MR25	R502-R504
58	3	417573	RESISTOR 10K 1/4W,5% / MR25	R501,505,506
59	1	141330	RESISTOR 22K 1/4W,5% / MR25	R213
62	2	417518	RESISTOR SIL 1KO 9-PIN,8-RESISTORS	R200,207
63	2	145745	RESISTOR SIL 10K 9-PIN,8-RESISTORS	R201,R500
75	2	332100	CAPASITOR CERAMIC 16PF 2222-680-58159	C202,203
77	1	417574	CAPASITOR CERAMIC 2N2 2222-630-53222	C505
79	1		CAPASITOR TANTAL 0,1uF / 35V	C205
80	17	133070	CAPASITOR TANTAL 1uF /35V	C100-103,200,201,207-210, C500-503,506,509,510
82	2	134050	CAPASITOR TANTAL 4u7 /35V	C204,C206
83	2	417575	CAPASITOR TANTAL 22uF/35 V	C504, C507
84	1	417521	CAPASITOR El.LYT 4700uF/16V MAX L=30mm	C508
85			SILICON	
88	1	417524	DIL SWITCH 8-POS 24008 GS / EECO	SW200
89	1	417525	CONNECTOR HEADER AWH26G0122 / ASSMANN	P401
90	1	417526	CONNECTOR AWP26-7150 / ASSMANN	J401
91	1	417427	CONNECTOR AWLP-10 / ASSMANN	J501
92	1	417528	CONNECTOR AWLP-16 / ASSMANN	J500
93	1	LS4192	CABLE,RIBBON 26 LEADS L=30cm 55-26-28-10G	J500,501
96	1	417531	SCREWTERMINAL 6-POS 956 SGDS / WECO	J502
97	1	417532	SCREWTERMINAL 6-POS 970 DS / WECO	J400
98	1	417533	SCREWTERMINAL 10-POS 970 DS / WECO	J402
99	2	417534	FLEXISTRIP FSN-21A-25 / T&B	J100,200
100	2	LS3533	SIDE-PANEL S63600/SAPA 96mm	0.3,0.6
101	2	LS3536	TOP&BOTTOM PANEL S63601/SAPA 180mm	0.4,0.5
102	1	LS3534	REAR COVER	0.1
103	1	LS4180	TERMINAL-ASSEMBLY	0.2
104	1	LS3535	CRADLE	0.9
105	2	LS4181	BRACKET FOR PANEL MOUNTING	PANEL MOUNT KIT
106	1	LS4182	HEATSINK	4.5
107	1	417535	NYLON SHOULDER WASHER M3/TO220	5.4
108	1	417536	MICA INSULATOR FOR TO220	5.5
109	1	151150	LINE FILTER F11,037 / STAUBO	L1/9.4
110	1	417537	TRANSFORMER 7564 P2S1 / TAHONIC	T1/6.3,6.4,6.5,6.6
111	1	151000	FUSE SOCKET FOR CHASSIS 031-1081 / FEIRING	8.1
113	3	417539	FUSE 100mA SLOW 5*20	8.2,SPARE PART KIT
114	2	417540	FUSE 200mA SLOW 5*20	SPARE PART KIT
115	2	417541	FUSE 1A SLOW 5*20	SPARE PART KIT
116	1	417542	FRONT-FOLIE W/BUTTONS / ISOF	0.8
117	1	417543	CONNECTOR,CLINCHER 65801-004 / BERG	0.8.1
118	1	LS4250	FILTER ACRYLIC 461D VIOLETT P-50	0.7
119	1	417544	GROMMET 134-001/HENACO	7.2
120	1	417545	CLAMPING 684-054 / HENACO	7.1
121	1	417546	MAINS CABLE "M PMH 2*0,75+EARTH	7.3
122	1	417547	PG 11, MAKROLON	18.2
123	1	417548	NUT PG11, BRASS	18.1
124	1	417549	BLINDING PG11, MAKROLON	SPARE PART KIT
125	2	417550	PG9, MAKROLON	19.2,20.2
126	2	417551	NUT PG9, BRASS	19.1,20.1
127	2	417552	BLINDING PG9, MAKROLON	SPARE PART KIT
128	2	LS4212	KNURLED NUT FOR PANEL MOUNTING	PANEL MOUNT KIT
129	2	LS4213	SCREW FOR CRADLE	0.9.1,0.9.8
130	2	LS4214	FRICTION WASHER	0.9.3,0.9.6
131	4	417553	SPACER M3*8mm ENLIS 2*8 / ELRA	1.3,2.3,3.3,4.3
132	4	417554	SPACER M3*25mm ENLIS 2*25 / ELRA	1.4,2.4,3.4,4.4
133	4	417555	SPACER M3*25mm ENHET 2*25 / ELRA	14.3,15.3,16.3,17.3
134	3	417556	SPACER M3*50mm ENHET 2*50 / ELRA	1.5,2.5,3.5
135	1	417557	SHRING CONNECTOR A1525SK	P1
136	4	417558	SOLDER TAG 03411.311.011/HELLANOR	9.3,21.3,21.4,21.5
137	18		SCREW CH/HD M3*8, NS1087-4,8-EL.SINK	1.7,2.7,3.7,4.7,5.1,5.7, 10.3,11.3,12.3,13.3,14.1, 14.5,15.1, 15.5,16.1,16.5,17.1,17.5
139	2		SCREW CH/HD M3*25,NS1087-4,8-EL.SINK	22.3,23.3
140	4		SCREW CH/HD M3*45, NS1087-4,8 EL.SINK	1.1,2.1,3.1,4.1
141	1		SCREW CH/HD M4*15,NS1087-4,8-EL.SINK	21.6
142	1		SCREW CH/HD M4*35,NS1087-4,8-EL.SINK	6.7
143	1		SCREW CH/HD M4*10,NS1087-4,8-EL.SINK	9.5
153	10		SCREW SELF TAP NO4*½" POZIDRIVE SST	0.3.1-0.3.4-0.6.1,0.6.4 P.M.KIT
154	8		SCREW SELF TAP NO4*1/4" TYPE Z EL.SINK	0.1.1,0.1.2,0.1.3,0.1.4, 0.1.5,0.1.6, P.M.KIT
155	4		SCREW SELF TAP FOR CRADLE NO6*3/4"	SPARE PART KIT
156	2		NUT M3 NS1827-5	22.1,23.1
157	3		NUT M4 NS1827-5	6.1,9.1,21.1
159	30		WASHER CRINKLE A3,2 DIN 6798EL	1.2,1.6,2.2,2.6,3.2,3.6, 4.2,4.6,5.2,5.6,10.2,11.2, 12.2,13.2,14.2,14.4,15.2, 15.4,16.2,16.4,17.2,17.4, 22.2,23.2,0.1.7,0.1.8, 0.1.9,0.1.10,0.1.11,0.1.12
161	1		WASHER PLAIN M3,2 DIN 433 EL	5.3
162	3		WASHER CRINKLE A4,3 DIN 6798 EL	6.2,9.2,21.2
163	2		WASHER WAVE B5,3 DIN 137	0.9.2,0.9.7
164	2		HANKNUT PF-M4-2	0.9.4,0.9.5
165	4		HANKNUT" ARB-M3-2,0-A	10.1,11.1,12.1,13.1
166	6	LS4256	PROGRAMING WIRE	
167	1	417559	LABEL FOR E-PROM	
168	2	417568	LABEL FOR "H" OR "L"	
170	1	417567	LABEL SERIAL NUMBER LR60A	
171	1	417561	LABEL FUSES	
172	1	417562	LABEL EARTH	
173	2	417563	MONOPLAST CASSETTE	
174	1	417564	PAPERBOX	
175	1	417565	PLASTIC BAG 230x325 mm	
176	1	417566	PLASTIC BAG 110x150 mm	

Certificate of Guarantee

This instrument is guaranteed against defective materials and workmanship for a period of one year from date of installation and limited to a period of 18 months after shipment of the instrument from Lehmkuhl Elektronikk A/S. Proof of said installation must be provided Lehmkuhl Elektronikk A/S by completing and returning the attached implementation of guarantee card immediately.

Under this guarantee Lehmkuhl Elektronikk A/S will either repair at its factory or replace this instrument or parts thereof which become defective in proper use and normal wear and tear provided the defective instrument or part of same is returned carriage paid to Lehmkuhl Elektronikk A/S, Oslo, Norway. Onboard labour and travelling expenses are not covered under this guarantee.

All requests for repair and replacement parts, printed circuit boards or units should be directed to the Lehmkuhl Elektronikk A/S representative in your area or directly to Lehmkuhl Elektronikk A/S in Oslo, Norway. Please include type designation and serial number in all correspondence concerning this instrument.

As far as possible all guarantee service will be limited to exchanging printed circuit boards or units. Replacement parts, printed circuit boards or units will be charged to the customer and refunded to him upon receipt of carriage paid said defective parts, printed circuit boards or units.

Lehmkuhl Elektronikk A/S shall not in any way be liable for any consequential loss or damage occurring to any vessel, structure or building in which this instrument is permanently or temporarily located nor to any person acting in connection with the instrument.

— Digital Gyro Repeater (DGR) —

Implementation of Guarantee Card **-Ship's Copy-**

DGR Type / Serial no _____ / _____

Gyro Type / Mains Voltage _____ / _____

Name of Vessel / Owner _____ / _____

NB no / Yard _____ / _____

Agent's Name _____

Installed by Date Master's Sign.

_____ _____ _____

LEHMKUHL ELEKTRONIKK A/S
HOVFARET 11, OSLO 2 - NORWAY, TELEPH. 472-500050 - TELEX 71583

— Digital Gyro Repeater (DGR) —

Implementation of Guarantee Card

-Distributor's Copy-

DGR Type / Serial no _____ / _____

Gyro Type / Mains Voltage _____ / _____

Name of Vessel / Owner _____ / _____

NB no / Yard _____ / _____

Agent's Name _____

Installed by	Date	Master's Sign.
_____	_____	_____

LEHMKUHL ELEKTRONIKK A/S
HOVFARET 11, OSLO 2 - NORWAY, TELEPH. 472-500050 TELEX 71583

— Digital Gyro Repeater (DGR) —

Implementation of Guarantee Card

-Distributor's Copy-

DGR Type / Serial no _____ / _____

Gyro Type / Mains Voltage _____ / _____

Name of Vessel / Owner _____ / _____

NB no / Yard _____ / _____

Agent's Name _____

Installed by	Date	Master's Sign.
_____	_____	_____

LEHMKUHL ELEKTRONIKK A/S
HOVFARET 11, OSLO 2 - NORWAY, TELEPH. 472-500050 TELEX 71583

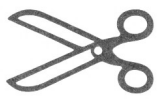

— Digital Gyro Repeater (DGR) —

Implementation of Guarantee Card

-Lehmkuhl's Copy-

DGR Type / Serial no _____ / _____

Gyro Type / Mains Voltage _____ / _____

Name of Vessel / Owner _____ / _____

NB no / Yard _____ / _____

Agent's Name _____

Installed by	Date	Master's Sign.
_____	_____	_____

LEHMKUHL ELEKTRONIKK A/S
HOVFARET 11, OSLO 2 - NORWAY, TELEPH. 472-500050 TELEX 71583